LED Headlights – Model 8800 Evolution 2

PRODUCT INFORMATION

Description	12-24V ECE LED LHT Low Beam Headlight with Black Bezel
Height	107.19 mm / 4.22 in
Width	167.64 mm / 6.6 in
Depth	84.90 mm / 3.34 in
Shape	Rectangular
Outer Lens Material	Hardcoated Polycarbonate
Outer Lens Color	Clear
Housing Material	Die-Cast Aluminum
Housing Color	Black
Bezel Color	Black
Mounting Type	Low-Profile Panel Mount
Retrofits	1A1 and 2A1 (4" 1 6") sealed beams
Minimum Operating Temperature	-40 °C / -40 °F
Maximum Operating Temperature	65 °C / 149 °F
Connector or Wiring	H4 Connector - AMP (#172615-2)
Mating Connector	LH Terminal - AMP (#172795-1); RH Terminal - AMP (#172796-1)

Print date: 2017-04-30

© 2017 J.W. Speaker Corporation • Germantown, WI U.S.A.

www.jwspeaker.com • speaker@jwspeaker.com • 262.251.6660

J.W. SPEAKER®
Engineered. Lighting. Solutions.

LED Headlights – Model 8800 Evolution 2

PRODUCT DIMENSIONS

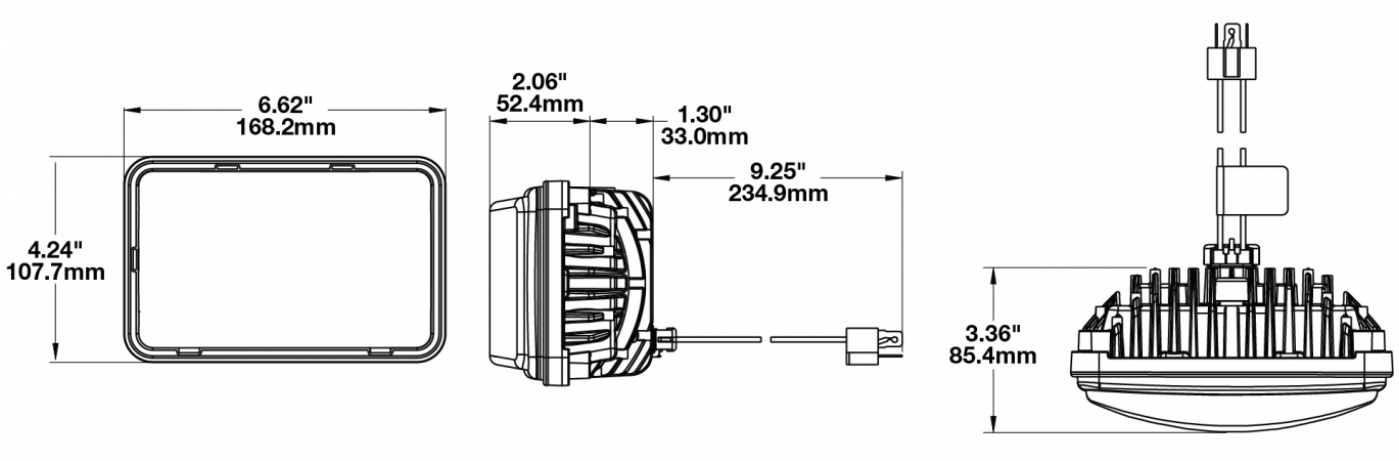

ELECTRICAL SPECIFICATIONS

Input Voltage	12-24V DC
Operating Voltage	9-32V DC
White Wire	Low Beam
Black Wire	Ground
Yellow Wire	Low Beam
Current Draw	2.10A @ 12V DC 1.00A @ 24V DC

REGULATORY STANDARDS COMPLIANCE

Buy America Standards
FMVSS 108 Table XIX

ECE Reg 112
IEC IP69K

Print date: 2017-04-30

© 2017 J.W. Speaker Corporation • Germantown, WI U.S.A.

www.jwspeaker.com • speaker@jwspeaker.com • 262.251.6660

J.W. SPEAKER®
Engineered. Lighting. Solutions.

LED Headlights – Model 8800 Evolution 2

PHOTOMETRIC SPECIFICATIONS

Raw Lumen Output	3,000
Effective Lumen Output	782
Candela Output	29,800
Nominal LED Color Temperature	5000 K
Beam Pattern(s)	Forward Lighting - Low Beam (ECE Left Hand)

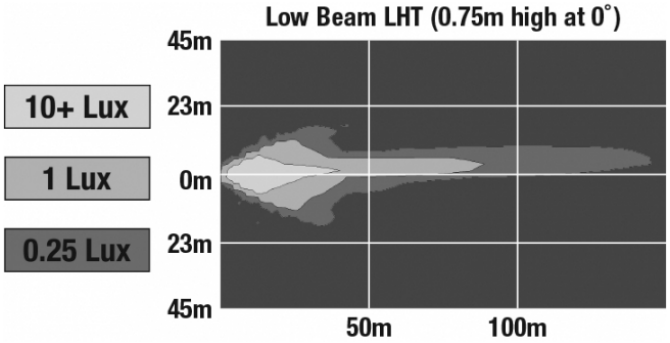

APPLICATIONS

Truck & Bus

© 2017 J.W. Speaker Corporation • Germantown, WI U.S.A.
www.jwspeaker.com • speaker@jwspeaker.com • 262.251.6660

J.W. SPEAKER®
Engineered. Lighting. Solutions.

LED Headlights – Model 8800 Evolution 2

RELATED PRODUCTS

Part Number 0551371
12-24V DOT/ECE LED RHT Low Beam Headlight with Chrome Bezel

Part Number 0551381
12-24V DOT/ECE LED High Beam Headlight with Chrome Bezel

Part Number 0551391
12-24V ECE LED LHT Low Beam Headlight with Chrome Bezel

Part Number 0551771
12-24V DOT/ECE LED RHT Low Beam Heated Headlight with Chrome Bezel

Part Number 0551781
12-24V DOT/ECE LED High Beam Heated Headlight with Chrome Bezel

Part Number 0552091
12-24V ECE LED LHT Low Beam Heated Headlight with Chrome Bezel

Part Number 0552551
12-24V DOT/ECE LED RHT Low Beam Headlight with Black Bezel

Part Number 0552571
12-24V DOT/ECE LED High Beam Headlight with Black Bezel

© 2017 J.W. Speaker Corporation • Germantown, WI U.S.A.
www.jwspeaker.com • speaker@jwspeaker.com • 262.251.6660

J.W. SPEAKER®
Engineered. Lighting. Solutions.