PART NUMBER 0555931

Reflector LED Headlights - Model 8620

PRODUCT INFORMATION

Description	12V DOT/ECE High & Low Beam Reflector Headlight with Dark Chrome Inner Bezel
Height	145.00 mm / 5.71 in
Width	145.00 mm / 5.71 in
Depth	98.50 mm / 3.88 in
Shape	Round
Outer Lens Material	Polycarbonate
Outer Lens Color	Clear
Housing Material	Aluminum
Housing Color	Black
Bezel Color	Dark Chrome
Retrofits	Bucket 5.75" Round Headlights (PAR46)
Connector or Wiring	H4
Mating Connector	H4 AMP#172515-2
Product Weight	1.49 lbs / 0.68 kgs
Shipping Weight	2.90 lbs / 1.32 kgs
Additional Information	Includes H-4 connector with 4th front position wire for ECE compliance.



PRODUCT DIMENSIONS

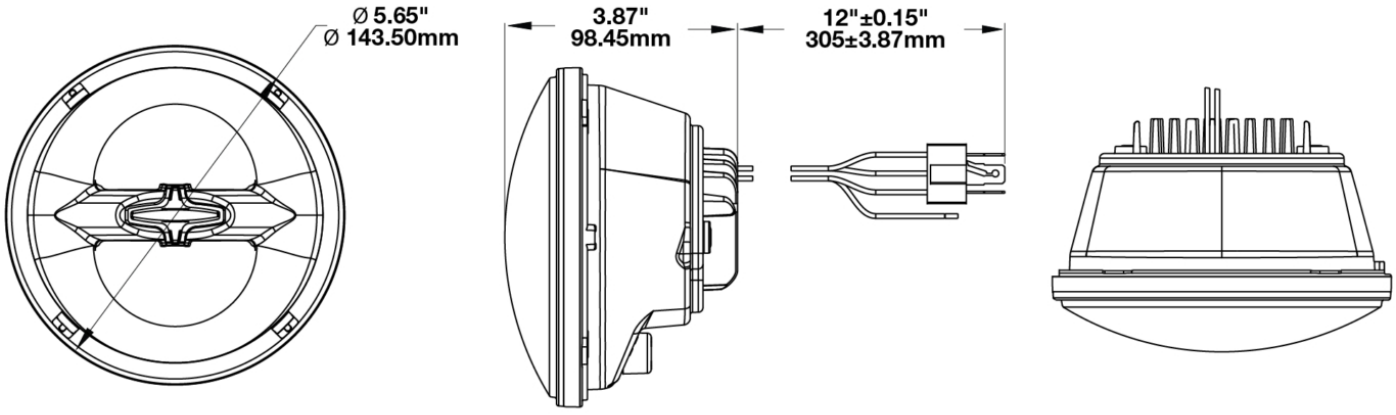

© 2026 J.W. Speaker Corporation • Germantown, WI U.S.A.
www.jwspeaker.com • speaker@jwspeaker.com • 262.251.6660

J.W. SPEAKER® Engineered. Lighting. Solutions.

PART NUMBER 0555931

Reflector LED Headlights - Model 8620

ELECTRICAL SPECIFICATIONS

Input Voltage	12V DC
Operating Voltage	9-16V DC
Black Wire	Ground
White Wire	High Beam
Yellow Wire	Low Beam
Red Wire	Front Position
Current Draw	2.67A @ 12V DC (High Beam) 1.67A @ 12V DC (Low Beam) 0.13A @ 12V DC (Front Position)

REGULATORY STANDARDS COMPLIANCE



Buy America Standards
ECE Reg 50
FMVSS 108 s10.1 (Table XX)
SAE J584
ECE Reg 113
Eco Friendly
IEC IP67

© 2026 J.W. Speaker Corporation • Germantown, WI U.S.A.
www.jwspeaker.com • speaker@jwspeaker.com • 262.251.6660

J.W. SPEAKER® Engineered. Lighting. Solutions.

PART NUMBER 0555931

Reflector LED Headlights - Model 8620

PHOTOMETRIC SPECIFICATIONS

Raw Lumen Output	1,620 (High Beam); 925 (Low Beam)
Effective Lumen Output	850 (High Beam); 500 (Low Beam)
Candela Output	41,000 (High Beam); 12,110 (Low Beam)
Nominal LED Color Temperature	5000 K
Beam Pattern(s)	Forward Lighting - High Beam (DOT/ECE) Forward Lighting - Low Beam (DOT/ECE) Signalization - Front Position

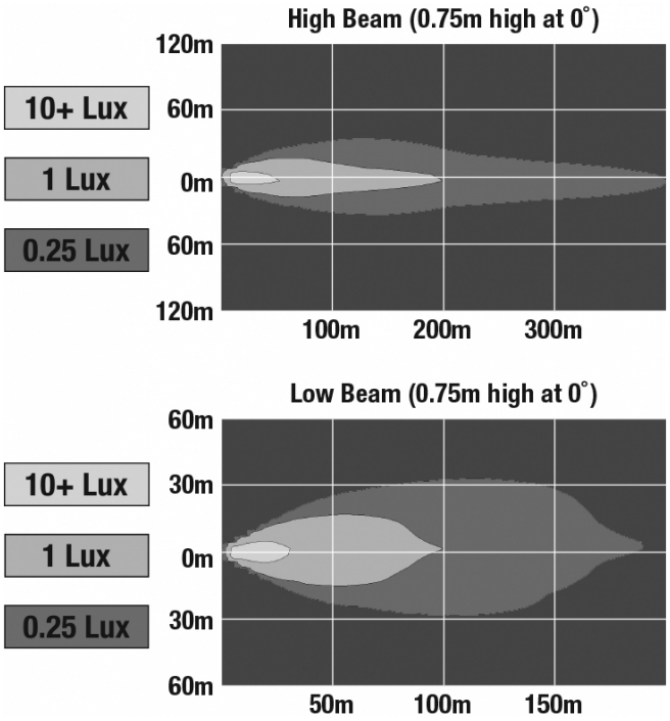

APPLICATIONS

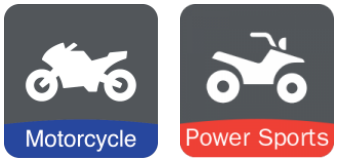

PRODUCT WARNINGS

For California residents:
⚠ **WARNING:** Cancer and reproductive harm - www.P65Warnings.ca.gov.
⚠ **AVERTISSEMENT:** Cancer et effet nocif sur la reproduction - www.P65Warnings.ca.gov.

© 2026 J.W. Speaker Corporation • Germantown, WI U.S.A.
www.jwspeaker.com • speaker@jwspeaker.com • 262.251.6660

J.W. SPEAKER® Engineered. Lighting. Solutions.

Reflector LED Headlights - Model 8620

RELATED PRODUCTS



Part Number 0553011
12V DOT/ECE High & Low Beam Reflector Headlight with Chrome Inner Bezel

© 2026 J.W. Speaker Corporation • Germantown, WI U.S.A.
www.jwspeaker.com • speaker@jwspeaker.com • 262.251.6660

J.W. SPEAKER® Engineered. Lighting. Solutions.