PART NUMBER 0562541

Peterbilt POD LED Headlights - Model 9600

PRODUCT INFORMATION

Description	12V Peterbilt LED Headlight, Right-hand, Chrome Bezel (Single Light, Harness Sold Separately)
Height	215.00 mm / 8.46 in
Width	443.00 mm / 17.44 in
Depth	210.00 mm / 8.27 in
Shape	Stylized
Outer Lens Material	Polycarbonate
Outer Lens Color	Clear
Housing Material	Polycarbonate
Housing Color	Black
Bezel Color	Chrome
Minimum Operating Temperature	-40 °C / -40 °F
Maximum Operating Temperature	65 °C / 149 °F
Connector or Wiring	Deutsch DT04-8PA
Mating Connector	Deutsch DT06-8SA
Product Weight	5.65 lbs / 2.56 kgs
Shipping Weight	6.49 lbs / 2.94 kgs





PRODUCT DIMENSIONS

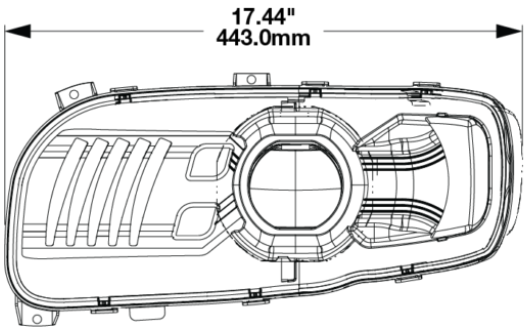

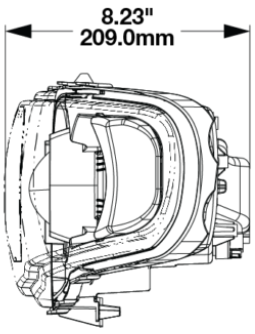

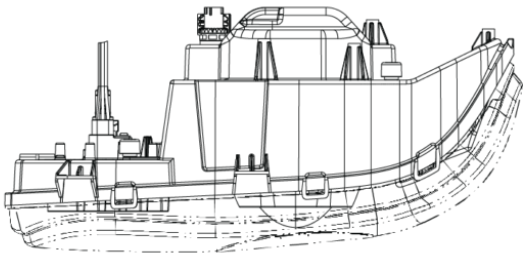

Print date: 2026-11-25
© 2026 J.W. Speaker Corporation • Germantown, WI U.S.A.
www.jwspeaker.com • speaker@jwspeaker.com • 262.251.6660

J.W. SPEAKER® Engineered. Lighting. Solutions.

PART NUMBER 0562541

Peterbilt POD LED Headlights - Model 9600

ELECTRICAL SPECIFICATIONS

Input Voltage	12V DC
Operating Voltage	9-18V DC
Transient Spike Protection	330V Peak @ 1 HZ-100 Pulses
Black Wire	Ground
Red Wire	(+) Rear Repeater
White Wire	High Beam
Yellow Wire	Low Beam
Green Wire	Turn Signal
Brown Wire	Side Marker
Current Draw	2.1A @ 12V DC (Low Beam) 4.2A @ 12V DC (High Beam) 2.15A @ 12V DC (Turn) 0.34A @ 12V DC (Side Marker/Parking)

REGULATORY STANDARDS COMPLIANCE



FMVSS 108 s10.1 (Table XIX)
FMVSS 108 s7.1 (Table VI)
FMVSS 108 s8.1 (Table XVI)
SAE J588
SAE J594
FMVSS 108 s10.1 (Table XVIII)
FMVSS 108 s7.4 (Table X)
IEC IP67
SAE J592

Print date: 2026-11-25

© 2026 J.W. Speaker Corporation • Germantown, WI U.S.A.

www.jwspeaker.com • speaker@jwspeaker.com • 262.251.6660

J.W. SPEAKER® Engineered. Lighting. Solutions.

PART NUMBER 0562541

Peterbilt POD LED Headlights - Model 9600

PHOTOMETRIC SPECIFICATIONS

Raw Lumen Output	2895 (High Beam), 1200 (Low Beam)
Effective Lumen Output	1020 (High Beam), 614 (Low Beam)
Candela Output	50400 (High Beam), 26690 (Low Beam)
Nominal LED Color Temperature	5000 K
Beam Pattern(s)	Forward Lighting - Daytime Running Light Forward Lighting - High Beam (DOT) Forward Lighting - Low Beam (DOT) Signalization - Front Position Signalization - Marker Signalization - Turn (Front)

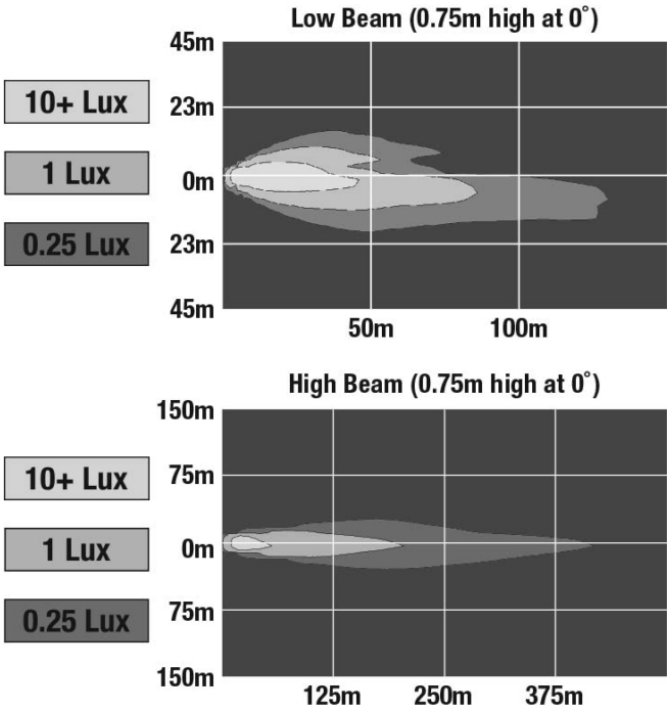

APPLICATIONS

Truck & Bus

INSTALLATION & APPLICATION INFORMATION

WIRE HARNESS NOT INCLUDED

Print date: 2026-11-25
© 2026 J.W. Speaker Corporation • Germantown, WI U.S.A.
www.jwspeaker.com • speaker@jwspeaker.com • 262.251.6660

J.W. SPEAKER® Engineered. Lighting. Solutions.

Peterbilt POD LED Headlights - Model 9600

PRODUCT WARNINGS

For California residents:
⚠ **WARNING:** Cancer and reproductive harm - www.P65Warnings.ca.gov.
⚠ **AVERTISSEMENT:** Cancer et effet nocif sur la reproduction - www.P65Warnings.ca.gov.

ACCESSORIES



Part Number 3271081
Wire Harness for Peterbilt Trucks 388/389, & 567*, Years 2023 and Older



Part Number 3272531
Wire Harness for Peterbilt Trucks 567* & 589, Years 2024 and Newer

© 2026 J.W. Speaker Corporation • Germantown, WI U.S.A.
www.jwspeaker.com • speaker@jwspeaker.com • 262.251.6660

J.W. SPEAKER® Engineered. Lighting. Solutions.

Peterbilt POD LED Headlights - Model 9600

RELATED PRODUCTS



Part Number 0562511
12V Peterbilt LED Heated Headlight, Left-hand, Chrome Bezel (Single Light, Harness Sold Separately)



Part Number 0562521
12V Peterbilt LED Heated Headlight, Right-hand, Chrome Bezel (Single Light, Harness Sold Separately)



Part Number 0562531
12V Peterbilt LED Headlight, Left-hand, Chrome Bezel (Single Light, Harness Sold Separately)



Part Number 0562551
12V Peterbilt LED Heated Headlight, Left-hand, Black Bezel (Single Light, Harness Sold Separately)



Part Number 0562561
12V Peterbilt LED Heated Headlight, Right-hand, Black Bezel (Single Light, Harness Sold Separately)



Part Number 0562571
12V Peterbilt LED Headlight, Left-hand, Black Bezel (Single Light, Harness Sold Separately)



Part Number 0562581
12V Peterbilt LED Headlight, Right-hand, Black Bezel (Single Light, Harness Sold Separately)

© 2026 J.W. Speaker Corporation • Germantown, WI U.S.A.
www.jwspeaker.com • speaker@jwspeaker.com • 262.251.6660

J.W. SPEAKER® Engineered. Lighting. Solutions.