PART NUMBER 1801541

Oval LED Work Light - Model 7251 XD

PRODUCT INFORMATION

Description	12-24V LED Work Light with Trapezoid Beam Pattern & Panel Mount
Height	152.40 mm / 6 in
Width	170.18 mm / 6.7 in
Depth	68.58 mm / 2.7 in
Shape	Oval
Outer Lens Material	Polycarbonate
Outer Lens Color	Clear
Housing Material	Polycarbonate
Housing Color	Black
Bezel Color	N/A
Mounting Hardware Description	(x1) 3/8-16 x 1.5" Stainless Steel Hex Head Bolt
Minimum Operating Temperature	-40 °C / -40 °F
Maximum Operating Temperature	65 °C / 149 °F
Connector or Wiring	Deutsch DT04-2P
Mating Connector	Deutsch DT06-2S
Product Weight	0.80 lbs / 0.36 kgs
Shipping Weight	2.50 lbs / 1.13 kgs



Print date: 2026-11-25

© 2026 J.W. Speaker Corporation • Germantown, WI U.S.A.

www.jwspeaker.com • speaker@jwspeaker.com • 262.251.6660

J.W. SPEAKER® Engineered. Lighting. Solutions.

PART NUMBER 1801541

Oval LED Work Light - Model 7251 XD

PRODUCT DIMENSIONS

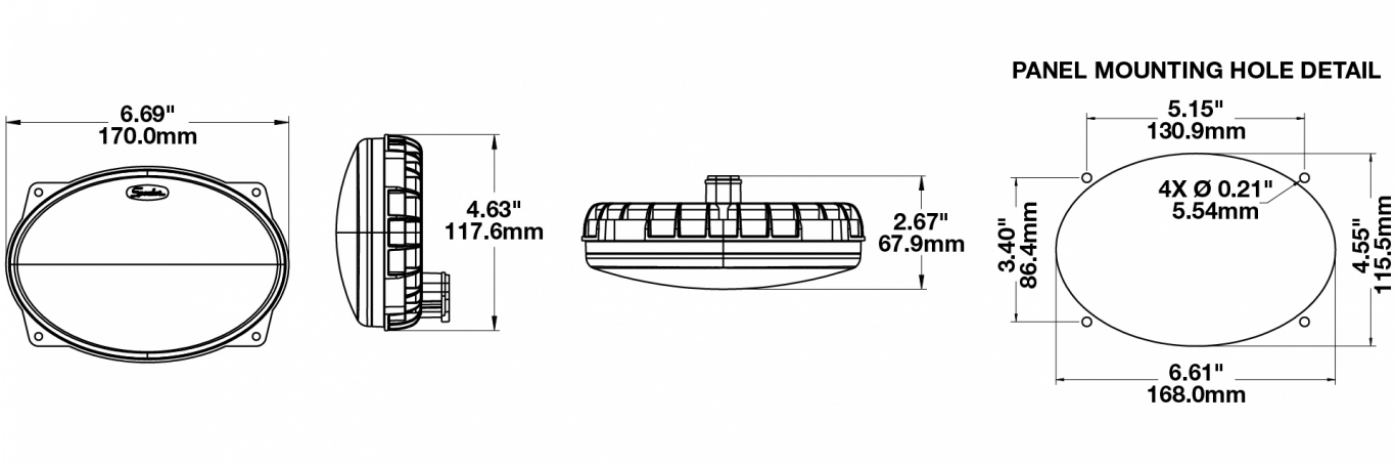

ELECTRICAL SPECIFICATIONS

Input Voltage	12-24V DC
Operating Voltage	10-32V DC
Black Wire	Ground
Red Wire	Power
Current Draw	1.60A @ 12V DC 0.90A @ 24V DC

REGULATORY STANDARDS COMPLIANCE



Buy America Standards
CISPR 22
IEC IP69K
UL Recognized
CISPR 12
Eco Friendly
SAE J1113-13

Print date: 2026-11-25

© 2026 J.W. Speaker Corporation • Germantown, WI U.S.A.

www.jwspeaker.com • speaker@jwspeaker.com • 262.251.6660

J.W. SPEAKER® Engineered. Lighting. Solutions.

Oval LED Work Light - Model 7251 XD

PHOTOMETRIC SPECIFICATIONS

Raw Lumen Output	3,150
Effective Lumen Output	1,400
Nominal LED Color Temperature	5000 K
Beam Pattern(s)	Forward Lighting - Trapezoid

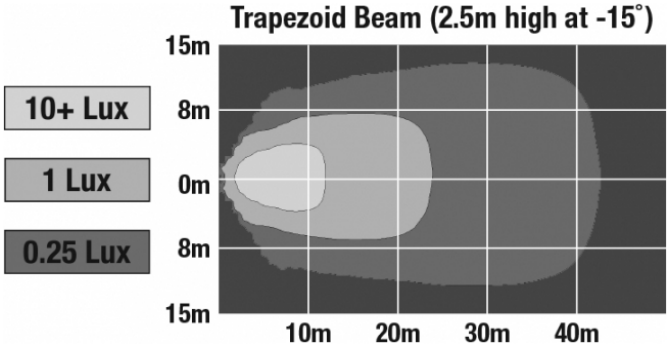

APPLICATIONS



PRODUCT WARNINGS

For California residents:
⚠ **WARNING:** Cancer and reproductive harm - www.P65Warnings.ca.gov.
⚠ **AVERTISSEMENT:** Cancer et effet nocif sur la reproduction - www.P65Warnings.ca.gov.

RELATED PRODUCTS



Part Number 1801531
12-24V LED Work Light with Spot Beam Pattern & Panel Mount



Part Number 1801551
12-24V LED Work Light with Flood Beam Pattern & Panel Mount

Print date: 2026-11-25
© 2026 J.W. Speaker Corporation • Germantown, WI U.S.A.
www.jwspeaker.com • speaker@jwspeaker.com • 262.251.6660

J.W. SPEAKER® Engineered. Lighting. Solutions.