PART NUMBER 1801531

# Oval LED Work Light - Model 7251 XD

## PRODUCT INFORMATION

| | |
|---|---|
| **Description** | 12-24V LED Work Light with Spot Beam Pattern & Panel Mount |
| **Height** | 152.40 mm / 6 in |
| **Width** | 170.18 mm / 6.7 in |
| **Depth** | 68.58 mm / 2.7 in |
| **Shape** | Oval |
| **Outer Lens Material** | Polycarbonate |
| **Outer Lens Color** | Clear |
| **Housing Material** | Polycarbonate |
| **Housing Color** | Black |
| **Bezel Color** | N/A |
| **Mounting Hardware Description** | (x1) 3/8-16 x 1.5" Stainless Steel Hex Head Bolt |
| **Minimum Operating Temperature** | -40 °C / -40 °F |
| **Maximum Operating Temperature** | 65 °C / 149 °F |
| **Connector or Wiring** | Deutsch DT04-2P |
| **Mating Connector** | Deutsch DT06-2S |
| **Product Weight** | 0.80 lbs / 0.36 kgs |
| **Shipping Weight** | 2.50 lbs / 1.13 kgs |



**Print date: 2026-11-26**

© 2026 J.W. Speaker Corporation • Germantown, WI U.S.A.

www.jwspeaker.com • speaker@jwspeaker.com • 262.251.6660

J.W. SPEAKER® Engineered. Lighting. Solutions.

PART NUMBER 1801531

# Oval LED Work Light - Model 7251 XD

## PRODUCT DIMENSIONS

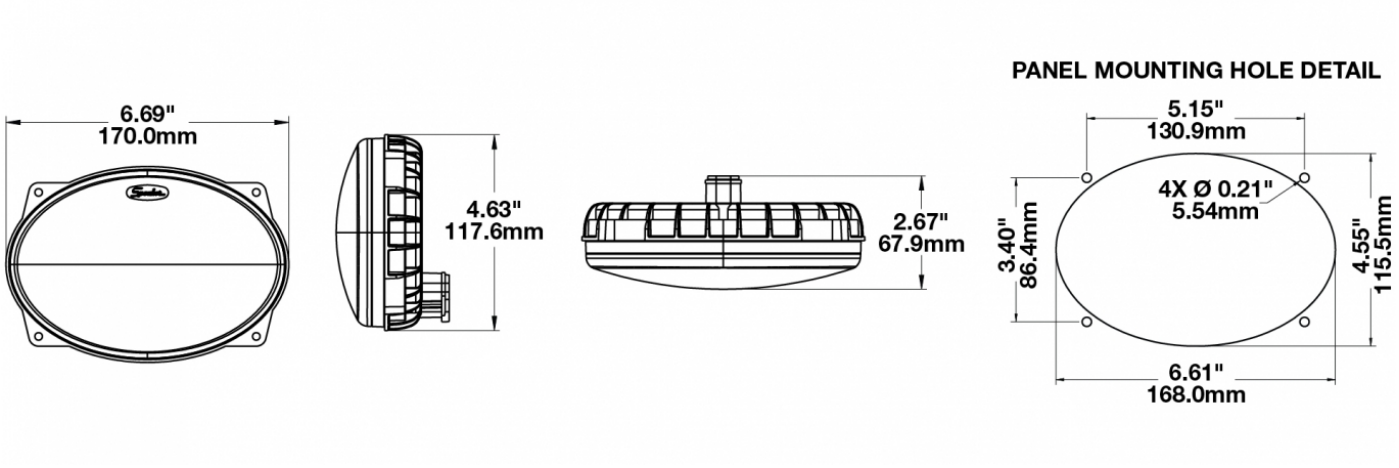


## ELECTRICAL SPECIFICATIONS

| | |
|---|---|
| **Input Voltage** | 12-24V DC |
| **Operating Voltage** | 10-32V DC |
| **Black Wire** | Ground |
| **Red Wire** | Power |
| **Current Draw** | 1.60A @ 12V DC<br>0.90A @ 24V DC |

## REGULATORY STANDARDS COMPLIANCE




Buy America Standards
CISPR 22
IEC IP69K
UL Recognized
CISPR 12
Eco Friendly
SAE J1113-13

**Print date: 2026-11-26**

© 2026 J.W. Speaker Corporation • Germantown, WI U.S.A.

www.jwspeaker.com • speaker@jwspeaker.com • 262.251.6660

J.W. SPEAKER
Engineered. Lighting. Solutions.

# Oval LED Work Light - Model 7251 XD

## PHOTOMETRIC SPECIFICATIONS

| | |
|---|---|
| **Raw Lumen Output** | 3,150 |
| **Effective Lumen Output** | 1,500 |
| **Nominal LED Color Temperature** | 5000 K |
| **Beam Pattern(s)** | Forward Lighting - Spot |

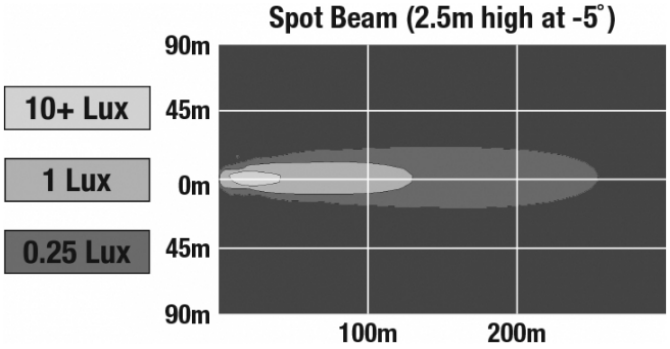


## APPLICATIONS




## PRODUCT WARNINGS

For California residents:
⚠ **WARNING:** Cancer and reproductive harm - www.P65Warnings.ca.gov.
⚠ **AVERTISSEMENT:** Cancer et effet nocif sur la reproduction - www.P65Warnings.ca.gov.

## RELATED PRODUCTS



**Part Number 1801541**
12-24V LED Work Light with Trapezoid Beam Pattern & Panel Mount



**Part Number 1801551**
12-24V LED Work Light with Flood Beam Pattern & Panel Mount

**Print date: 2026-11-26**
© 2026 J.W. Speaker Corporation • Germantown, WI U.S.A.
www.jwspeaker.com • speaker@jwspeaker.com • 262.251.6660

J.W. SPEAKER® Engineered. Lighting. Solutions.