PART NUMBER 0560121

LED Mosaic Modular Lighting System - Model 92

PRODUCT INFORMATION

Description	24V LED ECE High Beam & Front Position Headlight
Height	54.80 mm / 2.16 in
Width	83.80 mm / 3.3 in
Depth	76.70 mm / 3.02 in
Shape	Rectangular
Outer Lens Material	Polycarbonate
Outer Lens Color	Clear
Housing Material	Die-Cast Aluminum
Housing Color	Black
Bezel Color	n/a
Minimum Operating Temperature	-40 °C / -40 °F
Maximum Operating Temperature	65 °C / 149 °F
Mating Connector	JAE MX19A003S51 3 POS
Product Weight	0.55 lbs / 0.25 kgs
Shipping Weight	9.39 lbs / 4.26 kgs

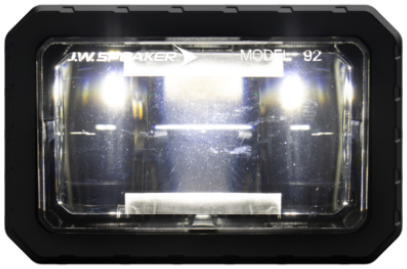

PRODUCT DIMENSIONS

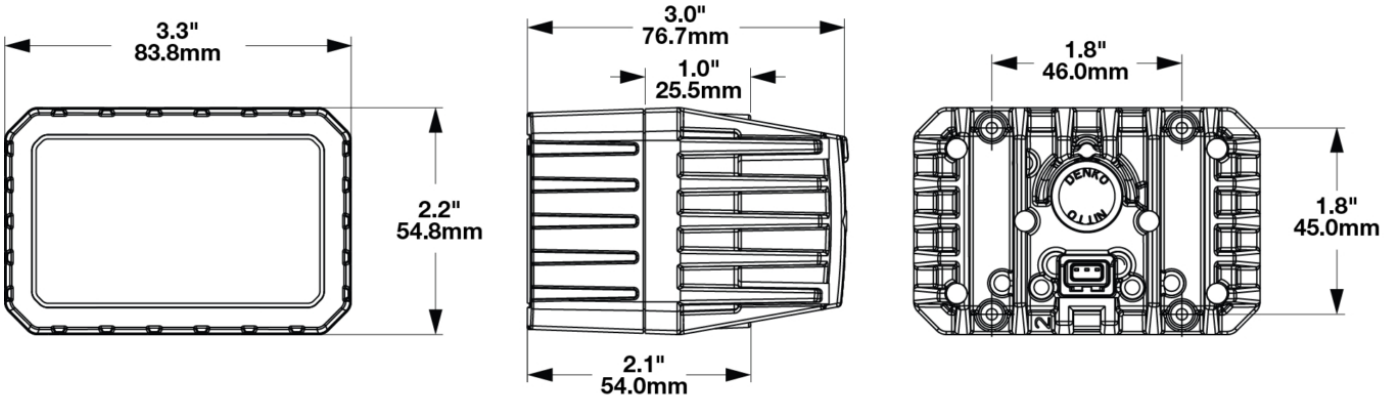

© 2026 J.W. Speaker Corporation • Germantown, WI U.S.A.
www.jwspeaker.com • speaker@jwspeaker.com • 262.251.6660

J.W. SPEAKER
Engineered. Lighting. Solutions.

PART NUMBER 0560121

LED Mosaic Modular Lighting System - Model 92

ELECTRICAL SPECIFICATIONS

Input Voltage	24V DC
Operating Voltage	18-36V DC
WHITE Wire	HIGH BEAM
RED Wire	FRONT POSITION
BLACK Wire	GROUND
Current Draw	0.70A @ 24V DC (HIGH BEAM) 0.09A @ 24V DC (FRONT POSITION)

REGULATORY STANDARDS COMPLIANCE

ASABE S608
ECE Reg 148 - A
ECE Reg 149 - HR
IEC IP67
IEC IP69K

PHOTOMETRIC SPECIFICATIONS

Raw Lumen Output	1650
Effective Lumen Output	360
Candela Output	42840
Nominal LED Color Temperature	5700 K
Beam Pattern(s)	Forward Lighting - High Beam (ECE)

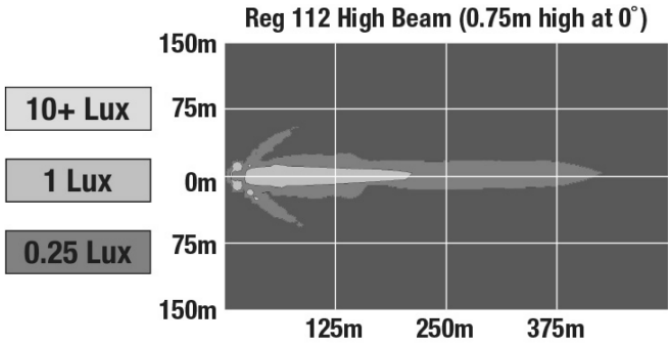

© 2026 J.W. Speaker Corporation • Germantown, WI U.S.A.
www.jwspeaker.com • speaker@jwspeaker.com • 262.251.6660

J.W. SPEAKER® Engineered. Lighting. Solutions.

PART NUMBER 0560121

LED Mosaic Modular Lighting System - Model 92

APPLICATIONS



INSTALLATION & APPLICATION INFORMATION

European high beam and front postion light.

PRODUCT WARNINGS

For California residents:
⚠ **WARNING:** Cancer and reproductive harm - www.P65Warnings.ca.gov.
⚠ **AVERTISSEMENT:** Cancer et effet nocif sur la reproduction - www.P65Warnings.ca.gov.

ACCESSORIES



Part Number 3200531
Wire Harness, 2.5M JAE 3-pin



Part Number 8200831
Mounting Hardware Kit for Mosaic



Part Number 8201031
Single Pedestal Mount Kit for Mosaic



Part Number 8201041
Tall Mounting Hardware Kit for Mosaic



Part Number 8201191
Dual Pedestal Mount Kit for Mosaic

Print date: 2026-11-25
© 2026 J.W. Speaker Corporation • Germantown, WI U.S.A.
www.jwspeaker.com • speaker@jwspeaker.com • 262.251.6660

J.W. SPEAKER® Engineered. Lighting. Solutions.

LED Mosaic Modular Lighting System - Model 92

RELATED PRODUCTS



Part Number 0347971
12-24V LED DOT/ECE DI & DRL Light



Part Number 0530293
12V LED Fog Light - 2 Light Kit with Mount & Wire Harness



Part Number 0530303
24V LED Fog Light - 2 Light Kit with Mount & Wire Harness



Part Number 0530313
24V LED High Beam & Front Position - 2 Light Kit with Mount & Wire Harness



Part Number 0530993
12V LED High Beam & Front Position - 2 Light Kit with Mount & Wire Harness



Part Number 0556821
12V LED SAE/ECE Fog Light



Part Number 0556831
12V LED SAE High Beam & DRL Headlight



Part Number 0557941
12V LED SAE/ECE Cornering Light

© 2026 J.W. Speaker Corporation • Germantown, WI U.S.A.
www.jwspeaker.com • speaker@jwspeaker.com • 262.251.6660

J.W. SPEAKER® Engineered. Lighting. Solutions.