PART NUMBER 0530993

LED Mosaic Modular Lighting System - Model 92

PRODUCT INFORMATION

Description	12V LED High Beam & Front Position - 2 Light Kit with Mount & Wire Harness
Height	54.80 mm / 2.16 in
Width	83.80 mm / 3.3 in
Depth	73.70 mm / 2.9 in
Shape	Rectangular
Outer Lens Material	Polycarbonate
Outer Lens Color	Clear
Housing Material	Die-Cast Aluminum
Housing Color	Black
Minimum Operating Temperature	-40 °C / -40 °F
Maximum Operating Temperature	65 °C / 149 °F
Mating Connector	JAE MX19A003S51 3 POS
Product Weight	0.55 lbs / 0.25 kgs
Shipping Weight	2.14 lbs / 0.97 kgs



Print date: 2026-11-25

© 2026 J.W. Speaker Corporation • Germantown, WI U.S.A.

www.jwspeaker.com • speaker@jwspeaker.com • 262.251.6660

J.W. SPEAKER® Engineered. Lighting. Solutions.

PART NUMBER 0530993

LED Mosaic Modular Lighting System - Model 92

PRODUCT DIMENSIONS

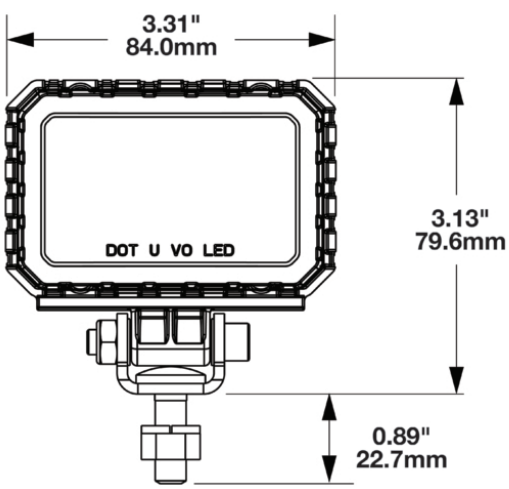

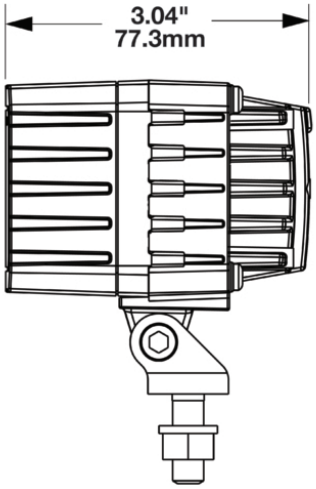

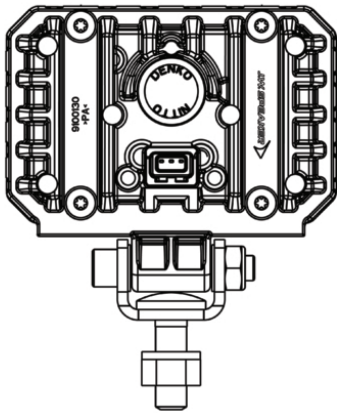

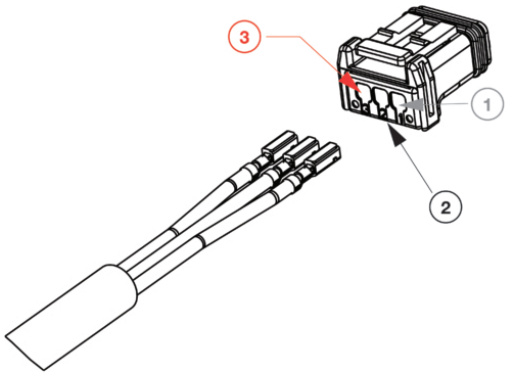

HIGH BEAM & FRONT POSITION

PIN	FUNCTION	COLOR
PIN 1	HIGH BEAM	WHITE
PIN 2	GROUND	BLACK
PIN 3	FRONT POSITION	RED

ELECTRICAL SPECIFICATIONS

Input Voltage	12V DC
Operating Voltage	10-16V DC
WHITE Wire	HIGH BEAM
BLACK Wire	GROUND
RED Wire	FRONT POSITION
Current Draw	1.30A @ 12V DC (HIGH BEAM) 0.18A @ 12V DC (FRONT POSITION)

Print date: 2026-11-25

© 2026 J.W. Speaker Corporation • Germantown, WI U.S.A.

www.jwspeaker.com • speaker@jwspeaker.com • 262.251.6660

J.W. SPEAKER
Engineered. Lighting. Solutions.

PART NUMBER 0530993

LED Mosaic Modular Lighting System - Model 92

REGULATORY STANDARDS COMPLIANCE



ECE Reg 148 - A
IEC IP67

ECE Reg 149 - HR
IEC IP69K

PHOTOMETRIC SPECIFICATIONS

Raw Lumen Output	1800
Effective Lumen Output	400
Candela Output	46000
Nominal LED Color Temperature	5700 K
Beam Pattern(s)	Forward Lighting - High Beam (ECE)

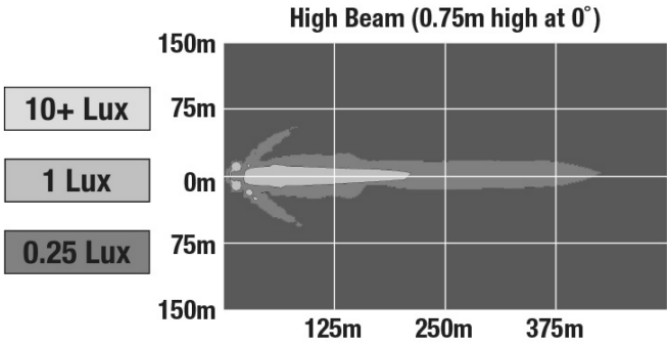

ADDITIONAL INFORMATION

KIT INCLUDES:
0560251 – Model 92, 12V High Beam Lamp (QTY 2)
3200531 – Wire Harness, 2.5M JAE 3-pin (QTY 2)
8201031 – Single Pedestal Mount (QTY 2)
(PLEASE NOTE: Kit components are NOT assembled, but provided in a bag)

PRODUCT WARNINGS

For California residents:
⚠ **WARNING:** Cancer and reproductive harm - www.P65Warnings.ca.gov.
⚠ **AVERTISSEMENT:** Cancer et effet nocif sur la reproduction - www.P65Warnings.ca.gov.

Print date: 2026-11-25
© 2026 J.W. Speaker Corporation • Germantown, WI U.S.A.
www.jwspeaker.com • speaker@jwspeaker.com • 262.251.6660

J.W. SPEAKER® Engineered. Lighting. Solutions.

LED Mosaic Modular Lighting System - Model 92

ACCESSORIES



Part Number 3200531
Wire Harness, 2.5M JAE 3-pin



Part Number 8200831
Mounting Hardware Kit for Mosaic



Part Number 8201031
Single Pedestal Mount Kit for Mosaic



Part Number 8201041
Tall Mounting Hardware Kit for Mosaic



Part Number 8201191
Dual Pedestal Mount Kit for Mosaic

RELATED PRODUCTS



Part Number 0347971
12-24V LED DOT/ECE DI & DRL Light



Part Number 0530293
12V LED Fog Light - 2 Light Kit with Mount & Wire Harness



Part Number 0530303
24V LED Fog Light - 2 Light Kit with Mount & Wire Harness



Part Number 0530313
24V LED High Beam & Front Position - 2 Light Kit with Mount & Wire Harness



Part Number 0556821
12V LED SAE/ECE Fog Light

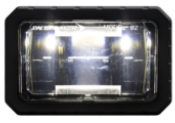

Part Number 0556831
12V LED SAE High Beam & DRL Headlight



Part Number 0557941
12V LED SAE/ECE Cornering Light



Part Number 0558321
12V LED SAE/ECE Symmetric Low Beam Headlight

Print date: 2026-11-25
© 2026 J.W. Speaker Corporation • Germantown, WI U.S.A.
www.jwspeaker.com • speaker@jwspeaker.com • 262.251.6660

J.W. SPEAKER® Engineered. Lighting. Solutions.