# Model 8700 EVO-X Headlight

## PRODUCT INFORMATION

| | |
|---|---|
| **Description** | 12-24V ECE LED LHT High and Low Beam Headlight with Black Bezel |
| **Height** | 177.2 mm / 6.98 in |
| **Width** | 177.2 mm / 6.98 in |
| **Depth** | 84.35 mm / 3.32 in |
| **Shape** | Round |
| **Outer Lens Material** | Hardcoated Polycarbonate |
| **Outer Lens Color** | Clear |
| **Housing Material** | Polycarbonate |
| **Housing Color** | Black |
| **Bezel Color** | Black |
| **Retrofits** | 2D1 "PAR56" or 7" Round Headlights |
| **Minimum Operating Temperature** | -40 °C / -40 °F |
| **Maximum Operating Temperature** | 65 °C / 149 °F |
| **Connector or Wiring** | Integrated 6-pin Deutsch to H4 (AMP #172615-2), 10" length |
| **Mating Connector** | H4 AMP#172615-2 |
| **Product Weight** | 1.62 lbs / 0.73 kgs |
| **Shipping Weight** | 2.21 lbs / 1 kgs |

**Print date: 2026-10-26**

© 2026 J.W. Speaker Corporation • Germantown, WI U.S.A.

www.jwspeaker.com • speaker@jwspeaker.com • 262.251.6660

# Model 8700 EVO-X Headlight

## PRODUCT DIMENSIONS

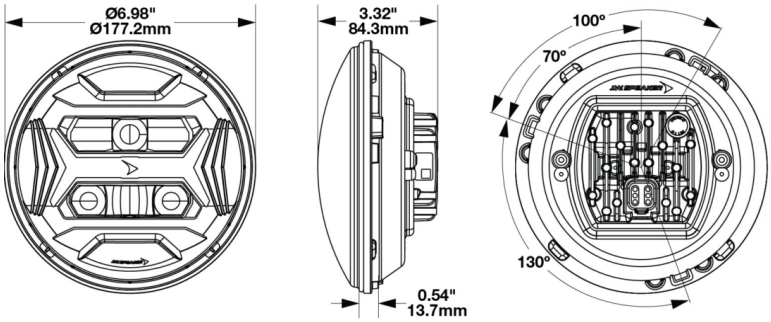


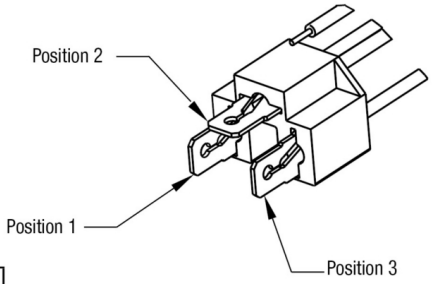


| PIN | WIRE |
|---|---|
| 1 | Red |
| 2 | Not Used |
| 3 | Black |

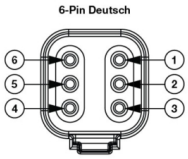


| PIN | FUNCTION |
|---|---|
| PIN 1 | Ground |
| PIN 2 | Low Beam |
| PIN 3 | High Beam |
| PIN 4 | - |
| PIN 5 | - |
| PIN 6 | - |

**Print date: 2026-10-26**

© 2026 J.W. Speaker Corporation • Germantown, WI U.S.A.

www.jwspeaker.com • speaker@jwspeaker.com • 262.251.6660

J.W. SPEAKER®
Engineered. Lighting. Solutions.

# Model 8700 EVO-X Headlight

## ELECTRICAL SPECIFICATIONS

| | |
|---|---|
| **Input Voltage** | 12-24V DC |
| **Operating Voltage** | 9-32V DC |
| **Yellow Wire** | Low Beam |
| **White Wire** | High Beam |
| **Black Wire** | Ground |
| **Current Draw** | 2.09A @ 12V DC (Low Beam)<br>1.13A @ 24V DC (Low Beam)<br>4.52A @ 12V DC (High Beam)<br>2.21A @ 24V DC (High Beam) |

## REGULATORY STANDARDS COMPLIANCE

ECE DOT Canada IP67 IP69K SAE

| | |
|---|---|
| ECE Reg 10 | ECE Reg 149 - C |
| ECE Reg 149 - HR | FMVSS 108 s10.1 (Table XIX) |
| FMVSS 108 s10.1 (Table XVIII) | IEC IP67 |
| IEC IP69K | SAE J1383 |


© 2026 J.W. Speaker Corporation • Germantown, WI U.S.A.
www.jwspeaker.com • speaker@jwspeaker.com • 262.251.6660

J.W. SPEAKER® Engineered. Lighting. Solutions.

# Model 8700 EVO-X Headlight

## PHOTOMETRIC SPECIFICATIONS

| | |
|---|---|
| **Raw Lumen Output** | 3,740 (High beam), 2,330 (Low Beam) |
| **Effective Lumen Output** | 1,195 (High Beam), 725 (Low beam) |
| **Candela Output** | 55,895 |
| **Nominal LED Color Temperature** | 5700 K |
| **Beam Pattern(s)** | Forward Lighting - High Beam (ECE)<br>Forward Lighting - Low Beam (ECE Left Hand) |

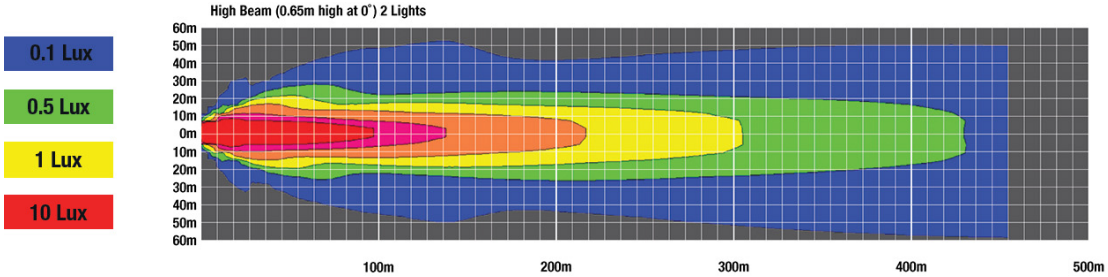


## APPLICATIONS

## PRODUCT WARNINGS

For California residents:
⚠ **WARNING:** Cancer and reproductive harm - www.P65Warnings.ca.gov.
⚠ **AVERTISSEMENT:** Cancer et effet nocif sur la reproduction - www.P65Warnings.ca.gov.

**Print date: 2026-10-26**
© 2026 J.W. Speaker Corporation • Germantown, WI U.S.A.
www.jwspeaker.com • speaker@jwspeaker.com • 262.251.6660

J.W. SPEAKER®
Engineered. Lighting. Solutions.

# Model 8700 EVO-X Headlight

## RELATED PRODUCTS

**Part Number 0562231**
12-24V DOT/ECE LED RHT 5-in-1 Headlight with Black Bezel

**Part Number 0562241**
12-24V DOT/ECE LED RHT 5-in-1 Headlight with Chrome Bezel

**Part Number 0562251**
12-24V DOT/ECE LED RHT 5-in-1 Heated Headlight with Black Bezel

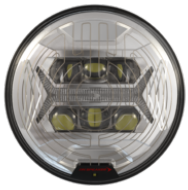

**Part Number 0562261**
12-24V DOT/ECE LED RHT 5-in-1 Heated Headlight with Chrome Bezel

**Part Number 0562271**
12-24V DOT/ECE LED High and Symmetric Low Beam Headlight with Front Position with Black Bezel

**Part Number 0562281**
12-24V DOT/ECE LED High and Symmetric Low Beam Headlight with Front Position with Chrome Bezel

**Part Number 0562291**
12-24V ECE LED LHT 5-in-1 Headlight with Black Bezel

**Part Number 0562301**
12-24V ECE LED LHT 5-in-1 Headlight with Chrome Bezel


© 2026 J.W. Speaker Corporation • Germantown, WI U.S.A.
www.jwspeaker.com • speaker@jwspeaker.com • 262.251.6660

J.W. SPEAKER®
Engineered. Lighting. Solutions.