PART NUMBER 0647411

Model 77 Blue Spot Safety Light

PRODUCT INFORMATION

Description	12-48V LED Blue Spot Safety Light with Deutsch Connector
Height	123.16 mm / 4.85 in
Width	88.62 mm / 3.49 in
Depth	83.42 mm / 3.28 in
Shape	Round
Outer Lens Material	Polycarbonate
Outer Lens Color	Clear
Housing Material	Polycarbonate
Housing Color	Black
Mounting Hardware Description	(x1) M10-1.5 x 25 mm Mounting Bolt
Mounting Type	Universal Pedestal Mount
Minimum Operating Temperature	-40 °C / -40 °F
Maximum Operating Temperature	65 °C / 149 °F
Connector or Wiring	Integral 2-Pin Deutsch Weather-Proof Socket
Mating Connector	2-Pin Deutsch Weather-Proof Plug (DT06-2S)
Product Weight	0.63 lbs / 0.29 kgs
Shipping Weight	1.49 lbs / 0.68 kgs
Additional Information	EXEMPT FROM PHOTOBIOLOGICAL WARNING MARKING – RISK GROUP 1 PER IEC 62471 Single packs include harness





© 2026 J.W. Speaker Corporation • Germantown, WI U.S.A.
www.jwspeaker.com • speaker@jwspeaker.com • 262.251.6660

J.W. SPEAKER® Engineered. Lighting. Solutions.

PART NUMBER 0647411

Model 77 Blue Spot Safety Light

PRODUCT DIMENSIONS

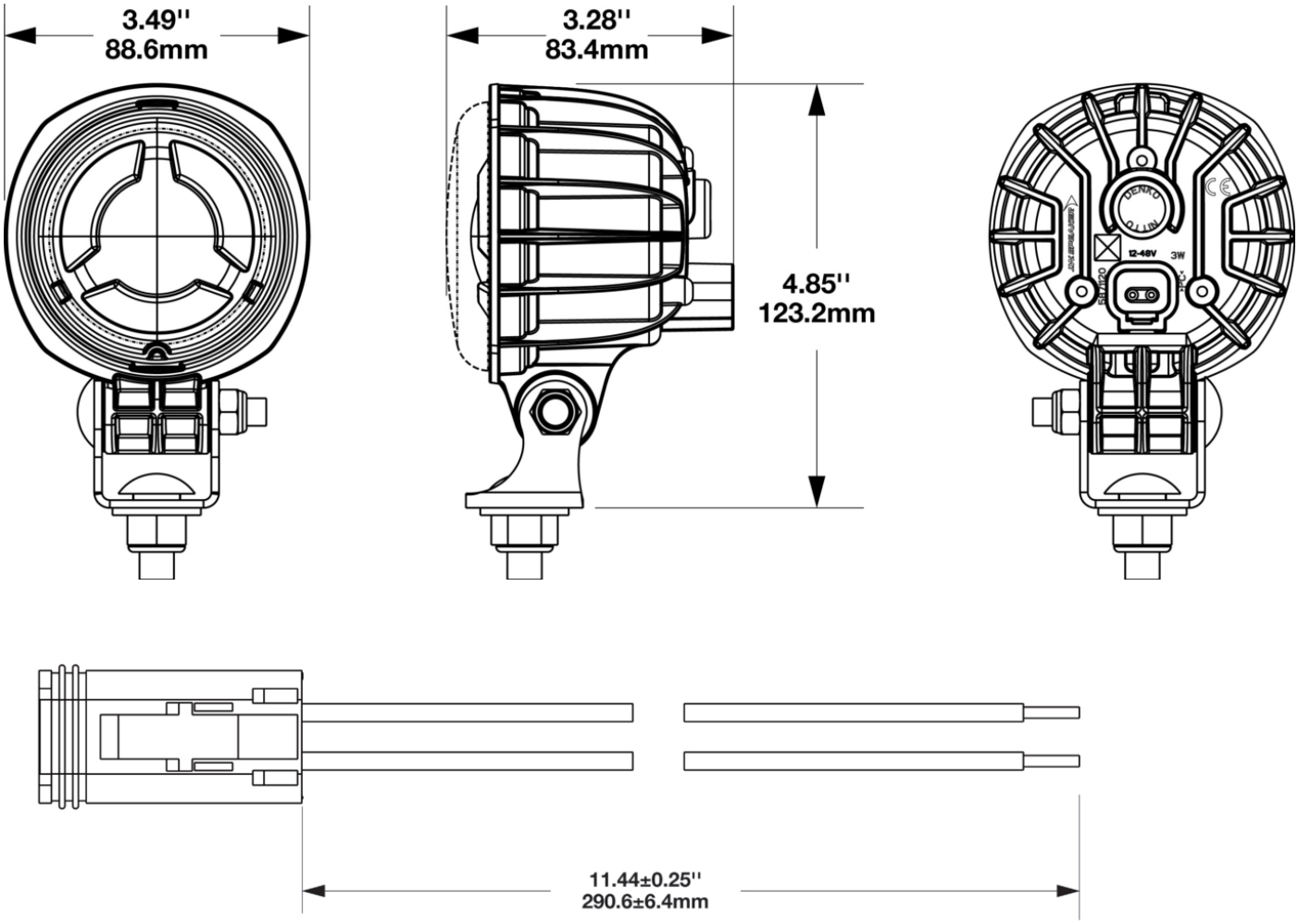

Print date: 2026-11-25
© 2026 J.W. Speaker Corporation • Germantown, WI U.S.A.
www.jwspeaker.com • speaker@jwspeaker.com • 262.251.6660

J.W. SPEAKER
Engineered. Lighting. Solutions.

PART NUMBER 0647411

Model 77 Blue Spot Safety Light

ELECTRICAL SPECIFICATIONS

Input Voltage	12-48V DC
Operating Voltage	9-60V DC
Black Wire	Ground
Red Wire	Power
Current Draw	0.23A @ 12V DC 0.12A @ 24V DC 0.09A @ 36V DC 0.06A @ 48V DC

REGULATORY STANDARDS COMPLIANCE

CE Recognized

IEC IP67

IEC IP69K

UL Recognized

PHOTOMETRIC SPECIFICATIONS

Beam Pattern(s)

Forward Lighting - Spot
Warning - Keep Out Zone

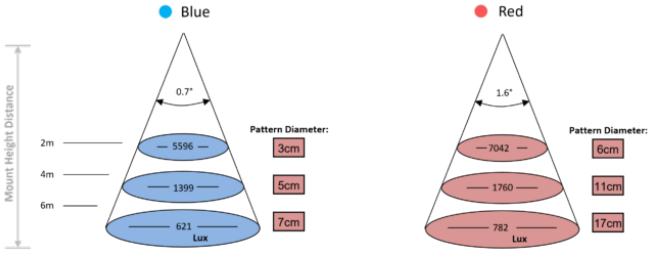

APPLICATIONS

Material

Print date: 2026-11-25
© 2026 J.W. Speaker Corporation • Germantown, WI U.S.A.
www.jwspeaker.com • speaker@jwspeaker.com • 262.251.6660

J.W. SPEAKER® Engineered. Lighting. Solutions.

Model 77 Blue Spot Safety Light

PRODUCT WARNINGS

For California residents:
⚠ **WARNING:** Cancer and reproductive harm - www.P65Warnings.ca.gov.
⚠ **AVERTISSEMENT:** Cancer et effet nocif sur la reproduction - www.P65Warnings.ca.gov.

RELATED PRODUCTS



Part Number 0647421
12-48V LED Blue Spot Safety Light with AMP Connector

© 2026 J.W. Speaker Corporation • Germantown, WI U.S.A.
www.jwspeaker.com • speaker@jwspeaker.com • 262.251.6660

J.W. SPEAKER® Engineered. Lighting. Solutions.