PART NUMBER 0647071

# LED Solar Flasher & Warning Light - Model 210

## PRODUCT INFORMATION

| | |
|---|---|
| **Description** | LED Solar Amber Flasher w/ Click Bond Mounting Kit |
| **Height** | 136.00 mm / 5.35 in |
| **Width** | 147.10 mm / 5.79 in |
| **Depth** | 21.00 mm / 0.83 in |
| **Shape** | Rectangular |
| **Outer Lens Material** | Acrylic |
| **Outer Lens Color** | Clear |
| **Housing Material** | Polycarbonate |
| **Housing Color** | Black |
| **Minimum Operating Temperature** | -40 °C / -40 °F |
| **Maximum Operating Temperature** | 65 °C / 149 °F |
| **Connector or Wiring** | NA |
| **Mating Connector** | NA |
| **Product Weight** | 0.40 lbs / 0.18 kgs |
| **Shipping Weight** | 0.80 lbs / 0.36 kgs |
| **Additional Information** | Flash sequence operates when there is not the presence of an external light source. |

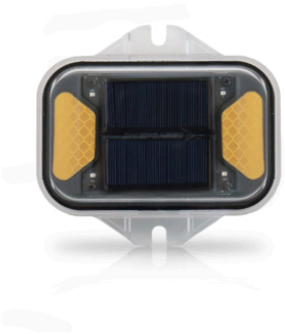





© 2026 J.W. Speaker Corporation • Germantown, WI U.S.A.
www.jwspeaker.com • speaker@jwspeaker.com • 262.251.6660

J.W. SPEAKER® Engineered. Lighting. Solutions.

PART NUMBER 0647071

# LED Solar Flasher & Warning Light - Model 210

## PRODUCT DIMENSIONS

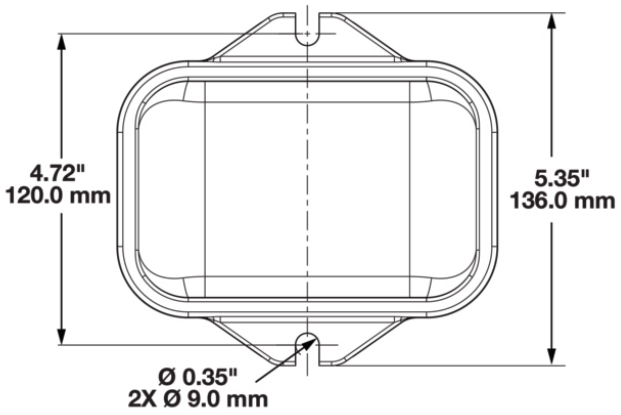


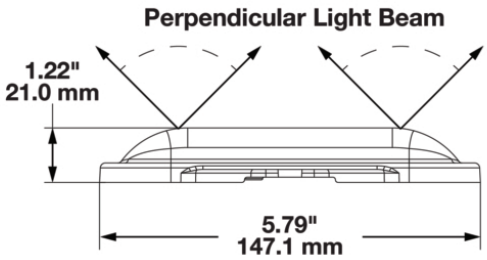


## ELECTRICAL SPECIFICATIONS

| | |
|---|---|
| **Battery Run Time** | 120 hours |
| **Battery Recharge Time** | 6 hours |

## REGULATORY STANDARDS COMPLIANCE

IEC IP69K

## PHOTOMETRIC SPECIFICATIONS

| | |
|---|---|
| **Beam Pattern(s)** | Warning - Flashing Warning |

**Print date: 2026-11-27**

© 2026 J.W. Speaker Corporation • Germantown, WI U.S.A.

www.jwspeaker.com • speaker@jwspeaker.com • 262.251.6660

# LED Solar Flasher & Warning Light - Model 210

## APPLICATIONS




## PRODUCT WARNINGS

For California residents:
⚠ **WARNING:** Cancer and reproductive harm - www.P65Warnings.ca.gov.
⚠ **AVERTISSEMENT:** Cancer et effet nocif sur la reproduction - www.P65Warnings.ca.gov.

## RELATED PRODUCTS

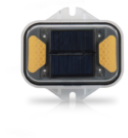

**Part Number 0647031**
LED Solar Amber Flasher



**Part Number 0647041**
LED Solar Red Flasher



**Part Number 0647081**
LED Solar Red Flasher w/ Click Bond Mounting Kit


© 2026 J.W. Speaker Corporation • Germantown, WI U.S.A.
www.jwspeaker.com • speaker@jwspeaker.com • 262.251.6660

J.W. SPEAKER® Engineered. Lighting. Solutions.