PART NUMBER 0647031

LED Solar Flasher & Warning Light - Model 210

PRODUCT INFORMATION

Description	LED Solar Amber Flasher
Height	136.00 mm / 5.35 in
Width	147.10 mm / 5.79 in
Depth	21.00 mm / 0.83 in
Shape	Rectangular
Outer Lens Material	Acrylic
Outer Lens Color	Clear
Housing Material	Polycarbonate
Housing Color	Black
Minimum Operating Temperature	-40 °C / -40 °F
Maximum Operating Temperature	65 °C / 149 °F
Connector or Wiring	NA
Mating Connector	NA
Product Weight	0.40 lbs / 0.18 kgs
Shipping Weight	0.50 lbs / 0.23 kgs
Additional Information	Flash sequence operates when there is not the presence of an external light source.

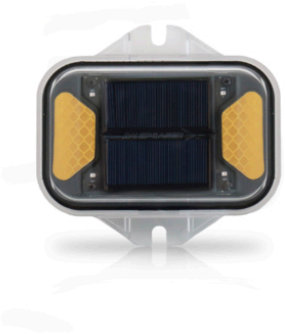

210 SOLAR FLASHER

PRODUCT DIMENSIONS

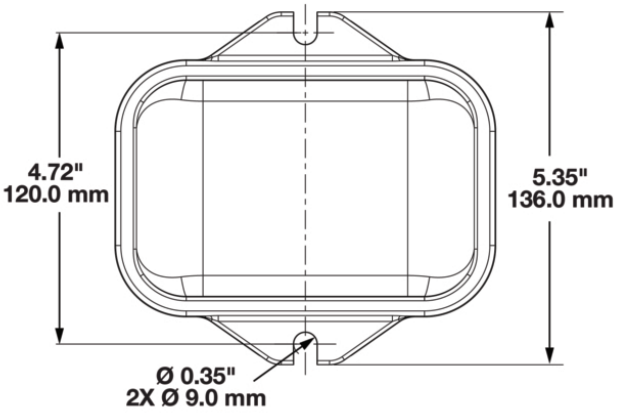

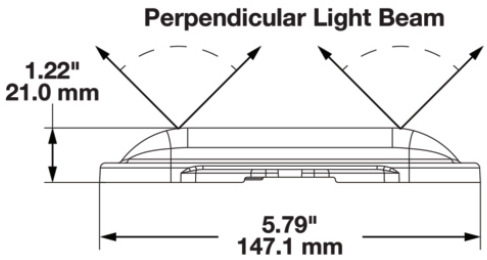

Print date: 2026-11-27

© 2026 J.W. Speaker Corporation • Germantown, WI U.S.A.

www.jwspeaker.com • speaker@jwspeaker.com • 262.251.6660

J.W. SPEAKER® Engineered. Lighting. Solutions.

PART NUMBER 0647031

LED Solar Flasher & Warning Light - Model 210

ELECTRICAL SPECIFICATIONS

Battery Run Time	120 hours
Battery Recharge Time	6 hours

REGULATORY STANDARDS COMPLIANCE



IEC IP69K

PHOTOMETRIC SPECIFICATIONS

Candela Output	11
Beam Pattern(s)	Warning - Flashing Warning

APPLICATIONS



PRODUCT WARNINGS

For California residents:
⚠ **WARNING:** Cancer and reproductive harm - www.P65Warnings.ca.gov.
⚠ **AVERTISSEMENT:** Cancer et effet nocif sur la reproduction - www.P65Warnings.ca.gov.

Print date: 2026-11-27
© 2026 J.W. Speaker Corporation • Germantown, WI U.S.A.
www.jwspeaker.com • speaker@jwspeaker.com • 262.251.6660

J.W. SPEAKER® Engineered. Lighting. Solutions.

LED Solar Flasher & Warning Light - Model 210

RELATED PRODUCTS



Part Number 0647041
LED Solar Red Flasher

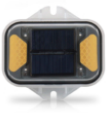

Part Number 0647071
LED Solar Amber Flasher w/ Click Bond Mounting Kit



Part Number 0647081
LED Solar Red Flasher w/ Click Bond Mounting Kit

Print date: 2026-11-27
© 2026 J.W. Speaker Corporation • Germantown, WI U.S.A.
www.jwspeaker.com • speaker@jwspeaker.com • 262.251.6660

J.W. SPEAKER® Engineered. Lighting. Solutions.