PART NUMBER 1706221

LED Work Lights - Model 771 XD

PRODUCT INFORMATION

Description	12-48V LED Amber Work Light
Height	180.34 mm / 7.1 in
Width	99.57 mm / 3.92 in
Depth	51.05 mm / 2.01 in
Shape	Oval
Outer Lens Material	Polycarbonate
Outer Lens Color	Amber
Housing Material	Polycarbonate
Housing Color	Black
Mounting Hardware Description	(x1) 5/16"-18 x 1.00" Mounting Bolt
Mounting Type	Universal Pedestal Mount
Minimum Operating Temperature	-40 °C / -40 °F
Maximum Operating Temperature	65 °C / 149 °F
Connector or Wiring	Integrated 2-Pin Deutsch Weather-Proof Socket (DT04-2P)
Mating Connector	2-Pin Deutsch Weather-Proof Plug (DT06-2S)
Product Weight	0.75 lbs / 0.34 kgs
Shipping Weight	6.69 lbs / 3.03 kgs



Print date: 2026-11-25

© 2026 J.W. Speaker Corporation • Germantown, WI U.S.A.

www.jwspeaker.com • speaker@jwspeaker.com • 262.251.6660

J.W. SPEAKER® Engineered. Lighting. Solutions.

PART NUMBER 1706221

LED Work Lights - Model 771 XD

PRODUCT DIMENSIONS

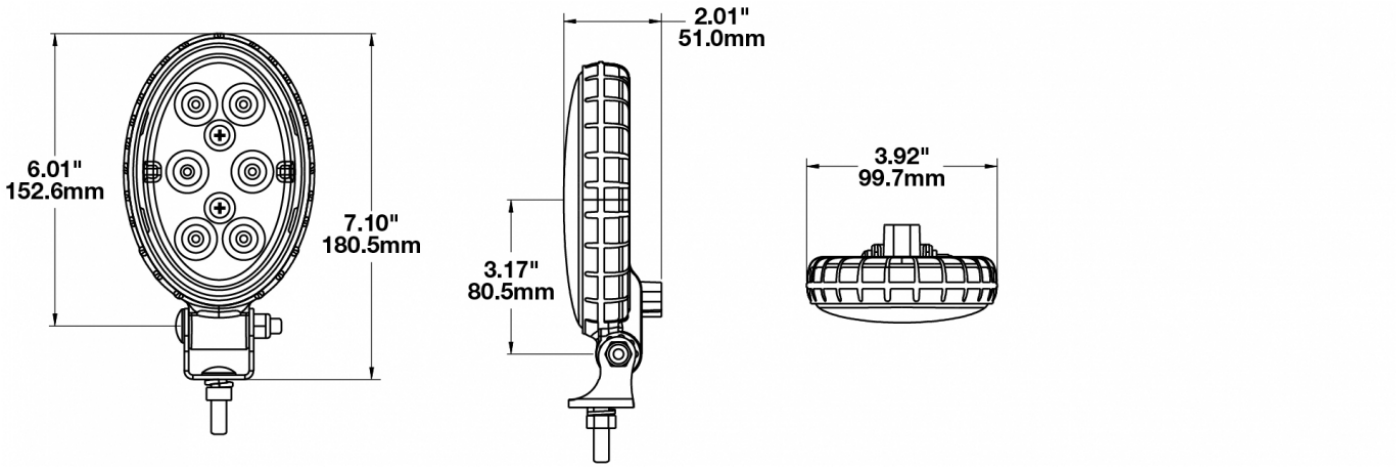

ELECTRICAL SPECIFICATIONS

Input Voltage	12-48V DC
Operating Voltage	10-55V DC
Transient Spike Protection	330V Peak @ 1 HZ-100 Pulses
Red Wire	Positive
Black Wire	Negative
Current Draw	1.00A @ 12V DC 0.48A @ 24V DC 0.33A @ 36V DC 0.25A @ 48V DC

© 2026 J.W. Speaker Corporation • Germantown, WI U.S.A.
www.jwspeaker.com • speaker@jwspeaker.com • 262.251.6660

J.W. SPEAKER
Engineered. Lighting. Solutions.

PART NUMBER 1706221

LED Work Lights - Model 771 XD

REGULATORY STANDARDS COMPLIANCE



Buy America Standards
CISPR 22
IEC IP67
UL Recognized
CISPR 12
Eco Friendly
SAE J974

PHOTOMETRIC SPECIFICATIONS

Raw Lumen Output	900
Effective Lumen Output	700
Beam Pattern(s)	Warning - Flashing Warning

APPLICATIONS



PRODUCT WARNINGS

For California residents:
⚠ **WARNING:** Cancer and reproductive harm - www.P65Warnings.ca.gov.
⚠ **AVERTISSEMENT:** Cancer et effet nocif sur la reproduction - www.P65Warnings.ca.gov.

Print date: 2026-11-25
© 2026 J.W. Speaker Corporation • Germantown, WI U.S.A.
www.jwspeaker.com • speaker@jwspeaker.com • 262.251.6660

J.W. SPEAKER® Engineered. Lighting. Solutions.

LED Work Lights - Model 771 XD

RELATED PRODUCTS



Part Number 1705911
12-48V LED Work Light with Flood Beam Pattern



Part Number 1706171
12-48V LED Work Light with Vertical Flood Beam Pattern



Part Number 1706191
12-48V LED Work Light with Spot Beam Pattern

© 2026 J.W. Speaker Corporation • Germantown, WI U.S.A.
www.jwspeaker.com • speaker@jwspeaker.com • 262.251.6660

J.W. SPEAKER® Engineered. Lighting. Solutions.