PART NUMBER 1706191

LED Work Lights - Model 771 XD

PRODUCT INFORMATION

Description	12-48V LED Work Light with Spot Beam Pattern
Height	180.34 mm / 7.1 in
Width	99.57 mm / 3.92 in
Depth	51.05 mm / 2.01 in
Shape	Oval
Outer Lens Material	Polycarbonate
Outer Lens Color	Clear
Housing Material	Polycarbonate
Housing Color	Black
Mounting Hardware Description	(x1) 5/16"-18 x 1.00" Mounting Bolt
Mounting Type	Universal Pedestal Mount
Minimum Operating Temperature	-40 °C / -40 °F
Maximum Operating Temperature	65 °C / 149 °F
Connector or Wiring	Integrated 2-Pin Deutsch Weather-Proof Socket (DT04-2P)
Mating Connector	2-Pin Deutsch Weather-Proof Plug (DT06-2S)
Product Weight	0.75 lbs / 0.34 kgs
Shipping Weight	6.65 lbs / 3.02 kgs



Print date: 2026-11-25

© 2026 J.W. Speaker Corporation • Germantown, WI U.S.A.

www.jwspeaker.com • speaker@jwspeaker.com • 262.251.6660

J.W. SPEAKER® Engineered. Lighting. Solutions.

PART NUMBER 1706191

LED Work Lights - Model 771 XD

PRODUCT DIMENSIONS

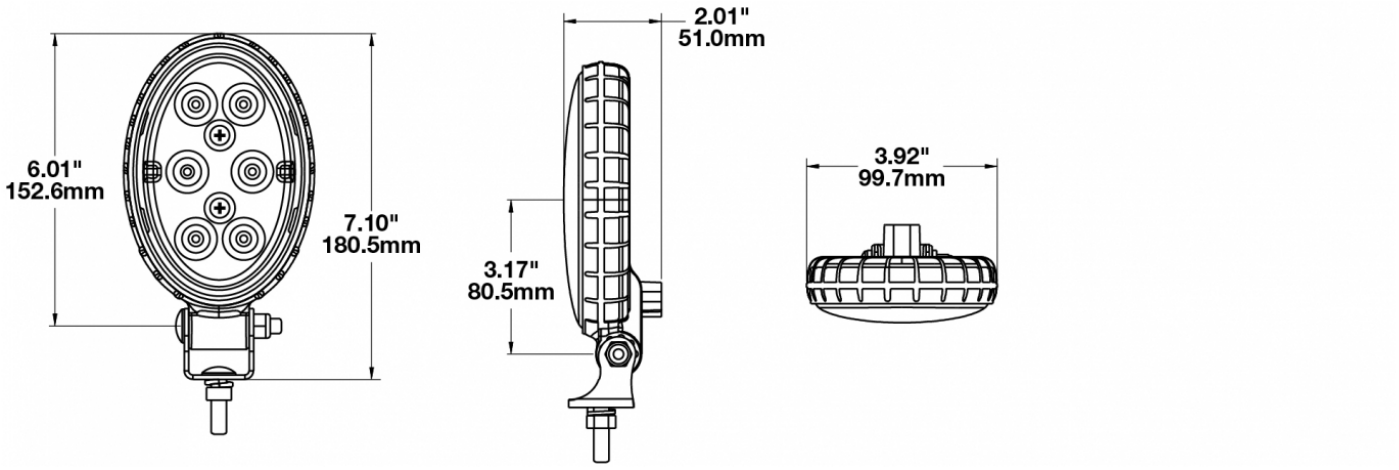

ELECTRICAL SPECIFICATIONS

Input Voltage	12-48V DC
Operating Voltage	10-55V DC
Transient Spike Protection	330V Peak @ 1 HZ-100 Pulses
Red Wire	Positive
Black Wire	Negative
Current Draw	1.00A @ 12V DC 0.48A @ 24V DC 0.33A @ 36V DC 0.25A @ 48V DC

REGULATORY STANDARDS COMPLIANCE



Buy America Standards	CISPR 12
CISPR 22	Eco Friendly
IEC IP67	UL Recognized

Print date: 2026-11-25

© 2026 J.W. Speaker Corporation • Germantown, WI U.S.A.

www.jwspeaker.com • speaker@jwspeaker.com • 262.251.6660

J.W. SPEAKER® Engineered. Lighting. Solutions.

PART NUMBER 1706191

LED Work Lights - Model 771 XD

PHOTOMETRIC SPECIFICATIONS

Raw Lumen Output	900
Effective Lumen Output	700
Nominal LED Color Temperature	5000 K
Beam Pattern(s)	Forward Lighting - Spot

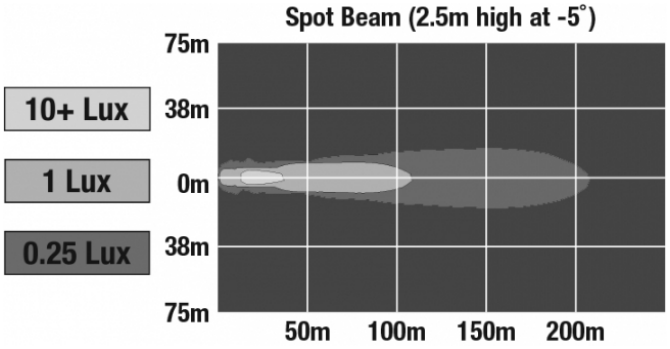

APPLICATIONS



PRODUCT WARNINGS

For California residents:
⚠ **WARNING:** Cancer and reproductive harm - www.P65Warnings.ca.gov.
⚠ **AVERTISSEMENT:** Cancer et effet nocif sur la reproduction - www.P65Warnings.ca.gov.

© 2026 J.W. Speaker Corporation • Germantown, WI U.S.A.
www.jwspeaker.com • speaker@jwspeaker.com • 262.251.6660

J.W. SPEAKER® Engineered. Lighting. Solutions.

LED Work Lights - Model 771 XD

RELATED PRODUCTS



Part Number 1705911
12-48V LED Work Light with Flood Beam Pattern



Part Number 1706171
12-48V LED Work Light with Vertical Flood Beam Pattern



Part Number 1706221
12-48V LED Amber Work Light

© 2026 J.W. Speaker Corporation • Germantown, WI U.S.A.
www.jwspeaker.com • speaker@jwspeaker.com • 262.251.6660

J.W. SPEAKER® Engineered. Lighting. Solutions.