PART NUMBER 1501651

LED Work Lights - Model 680 XD

PRODUCT INFORMATION

Description	12-24V LED Work Light with Trapezoid Beam Pattern
Height	193.80 mm / 7.63 in
Width	157.23 mm / 6.19 in
Depth	65.28 mm / 2.57 in
Shape	Round
Outer Lens Material	Polycarbonate
Outer Lens Color	Clear
Housing Material	Polycarbonate
Housing Color	Black
Mounting Hardware Description	(x1) 3/8-16 x 1.5" Mounting Bolt
Mounting Type	Universal Pedestal Mount
Minimum Operating Temperature	-40 °C / -40 °F
Maximum Operating Temperature	65 °C / 149 °F
Connector or Wiring	Integrated 2-Pin Deutsch Weather-Proof Socket (DT04-2P)
Mating Connector	2-Pin Deutsch Weather-Proof Plug (DT06-2S)
Product Weight	1.52 lbs / 0.69 kgs
Shipping Weight	1.40 lbs / 0.64 kgs



Print date: 2026-11-25

© 2026 J.W. Speaker Corporation • Germantown, WI U.S.A.

www.jwspeaker.com • speaker@jwspeaker.com • 262.251.6660

J.W. SPEAKER® Engineered. Lighting. Solutions.

PART NUMBER 1501651

LED Work Lights - Model 680 XD

PRODUCT DIMENSIONS

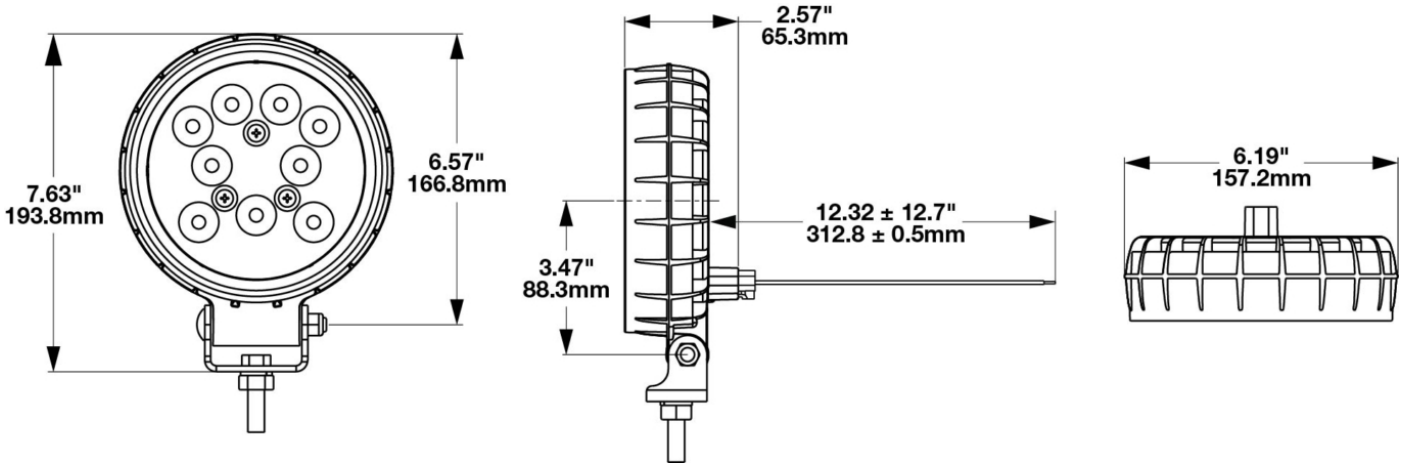

ELECTRICAL SPECIFICATIONS

Input Voltage	12-24V DC
Operating Voltage	10-32V DC
Transient Spike Protection	330V Peak @ 1 HZ-100 Pulses
Red Wire	Positive
Black Wire	Negative
Current Draw	2A @ 12V DC 1A @ 24V DC

REGULATORY STANDARDS COMPLIANCE



Buy America Standards
CISPR 22
IEC IP69K
CISPR 12
Eco Friendly
SAE J1113-13

Print date: 2026-11-25

© 2026 J.W. Speaker Corporation • Germantown, WI U.S.A.

www.jwspeaker.com • speaker@jwspeaker.com • 262.251.6660

J.W. SPEAKER
Engineered. Lighting. Solutions.

PART NUMBER 1501651

LED Work Lights - Model 680 XD

PHOTOMETRIC SPECIFICATIONS

Raw Lumen Output	2,385
Effective Lumen Output	1,270
Nominal LED Color Temperature	5000 K
Beam Pattern(s)	Forward Lighting - Trapezoid

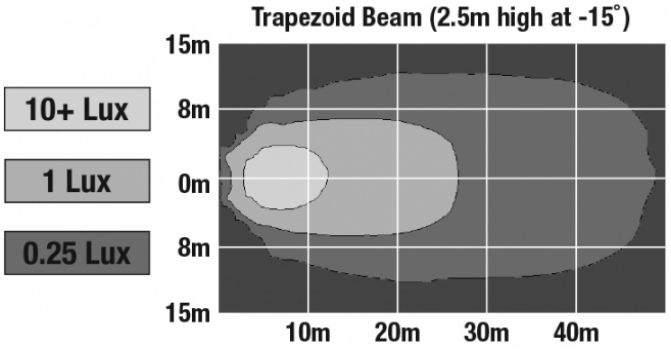

APPLICATIONS



PRODUCT WARNINGS

For California residents:
⚠ **WARNING:** Cancer and reproductive harm - www.P65Warnings.ca.gov.
⚠ **AVERTISSEMENT:** Cancer et effet nocif sur la reproduction - www.P65Warnings.ca.gov.

Print date: 2026-11-25
© 2026 J.W. Speaker Corporation • Germantown, WI U.S.A.
www.jwspeaker.com • speaker@jwspeaker.com • 262.251.6660

J.W. SPEAKER® Engineered. Lighting. Solutions.

LED Work Lights - Model 680 XD

RELATED PRODUCTS



Part Number 1501641
12-24V LED Work Light with Flood Beam Pattern



Part Number 1501661
12-24V LED Work Light with Spot Beam Pattern

© 2026 J.W. Speaker Corporation • Germantown, WI U.S.A.
www.jwspeaker.com • speaker@jwspeaker.com • 262.251.6660

J.W. SPEAKER® Engineered. Lighting. Solutions.