PART NUMBER 1707201

LED Work Lights & Turn Signal Lights - Model 775 XD

PRODUCT INFORMATION

Description	12-48V Amber Clear LED Work Light with Spot Beam and Turn Signal
Height	180.46 mm / 7.1 in
Width	99.68 mm / 3.92 in
Depth	59.76 mm / 2.35 in
Shape	Oval
Outer Lens Material	Polycarbonate
Outer Lens Color	Clear
Housing Material	Polycarbonate
Housing Color	Black
Mounting Hardware Description	(x1) 5/16"-18 x 1.00" Mounting Bolt
Mounting Type	Universal Pedestal Mount
Minimum Operating Temperature	-40 °C / -40 °F
Maximum Operating Temperature	65 °C / 149 °F
Connector or Wiring	4-Pin Deutsch Weather-Proof Plug (DT06-4S)
Product Weight	0.60 lbs / 0.27 kgs
Shipping Weight	4.32 lbs / 1.96 kgs



Print date: 2026-11-24

© 2026 J.W. Speaker Corporation • Germantown, WI U.S.A.

www.jwspeaker.com • speaker@jwspeaker.com • 262.251.6660

J.W. SPEAKER® Engineered. Lighting. Solutions.

LED Work Lights & Turn Signal Lights - Model 775 XD

PRODUCT DIMENSIONS

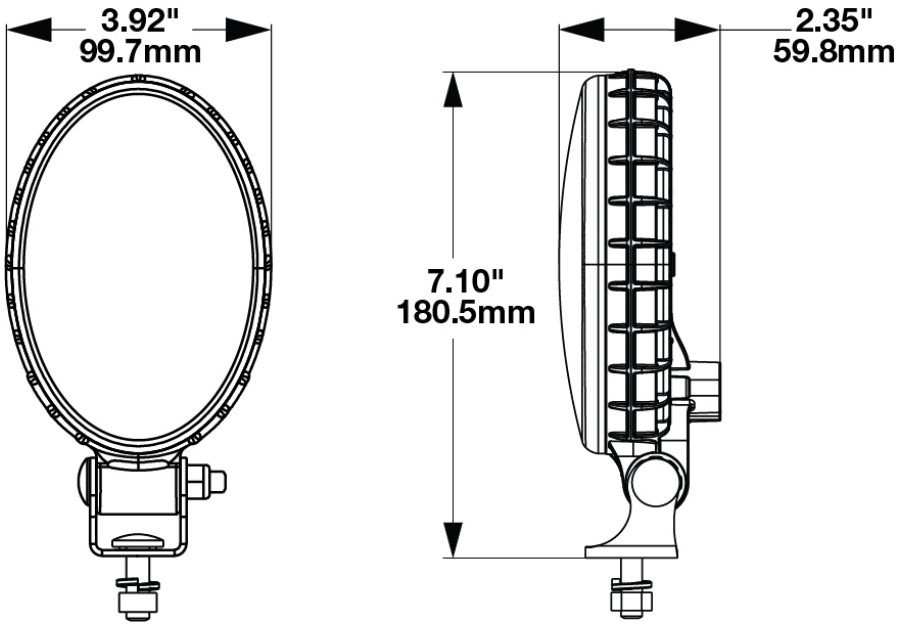

Print date: 2026-11-24
© 2026 J.W. Speaker Corporation • Germantown, WI U.S.A.
www.jwspeaker.com • speaker@jwspeaker.com • 262.251.6660

J.W. SPEAKER® Engineered. Lighting. Solutions.

PART NUMBER 1707201

LED Work Lights & Turn Signal Lights - Model 775 XD

ELECTRICAL SPECIFICATIONS

Input Voltage	12-48V DC
Operating Voltage	9-60V DC
Transient Spike Protection	330V Peak @ 1 HZ-100 Pulses
pin 4 Wire	Ground
pin 2 Wire	Worklight
pin 1 Wire	Park/Tail
pin 3 Wire	Turn
Current Draw	1.25A @ 12V DC (Worklamp) 0.180A @ 12V DC (Turn) 0.015A @ 12V DC (Park) 0.560A @ 24V DC (Worklamp) 0.100A @ 24V DC (Turn) 0.010A @ 24V DC (Park) 0.390A @ 36V DC (Worklamp) 0.080A @ 36V DC (Turn) 0.010A @ 36V DC (Park) 0.300A @ 48V DC (Worklamp) 0.070A @ 48V DC (Turn) 0.010A @ 48V DC (Park)

REGULATORY STANDARDS COMPLIANCE



Buy America Standards
Eco Friendly
ECE Reg 6
IEC IP67

Print date: 2026-11-24

© 2026 J.W. Speaker Corporation • Germantown, WI U.S.A.

www.jwspeaker.com • speaker@jwspeaker.com • 262.251.6660

J.W. SPEAKER® Engineered. Lighting. Solutions.

PART NUMBER 1707201

LED Work Lights & Turn Signal Lights - Model 775 XD

PHOTOMETRIC SPECIFICATIONS

Raw Lumen Output	1100
Effective Lumen Output	620
Nominal LED Color Temperature	5000 K
Beam Pattern(s)	Forward Lighting - Spot

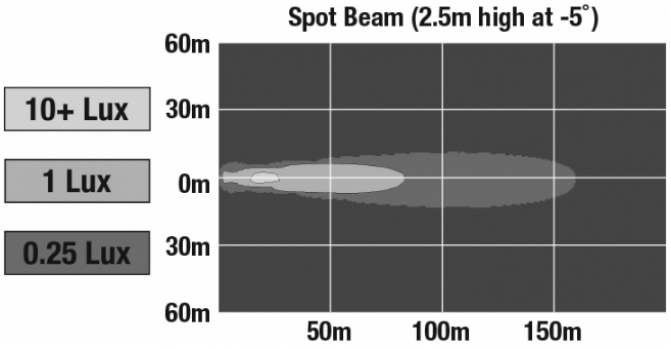

APPLICATIONS



PRODUCT WARNINGS

For California residents:
⚠ **WARNING:** Cancer and reproductive harm - www.P65Warnings.ca.gov.
⚠ **AVERTISSEMENT:** Cancer et effet nocif sur la reproduction - www.P65Warnings.ca.gov.

Print date: 2026-11-24
© 2026 J.W. Speaker Corporation • Germantown, WI U.S.A.
www.jwspeaker.com • speaker@jwspeaker.com • 262.251.6660

J.W. SPEAKER® Engineered. Lighting. Solutions.