PART NUMBER 1603601

LED Work Light – Model 791

PRODUCT INFORMATION

Description	12V DOT/ECE LED Fog Light
Height	48.40 mm / 1.91 in
Width	150.40 mm / 5.92 in
Depth	63.00 mm / 2.48 in
Shape	Rectangular
Outer Lens Material	Polycarbonate
Outer Lens Color	Clear
Housing Material	Die-Cast Aluminum
Housing Color	Black
Bezel Color	Black
Mounting Hardware Description	(x2) 8mm-20 x 25mm Mounting Bolt Bracket
Minimum Operating Temperature	-40 °C / -40 °F
Maximum Operating Temperature	65 °C / 149 °F
Connector or Wiring	Integrated 2-Pin Deutsch Connector
Mating Connector	2-Pin Deutsch Weather-Proof Plug (DT06-2S)
Product Weight	0.80 lbs / 0.36 kgs
Shipping Weight	1.20 lbs / 0.54 kgs



Print date: 2026-11-26

© 2026 J.W. Speaker Corporation • Germantown, WI U.S.A.

www.jwspeaker.com • speaker@jwspeaker.com • 262.251.6660

J.W. SPEAKER® Engineered. Lighting. Solutions.

PART NUMBER 1603601

LED Work Light – Model 791

PRODUCT DIMENSIONS

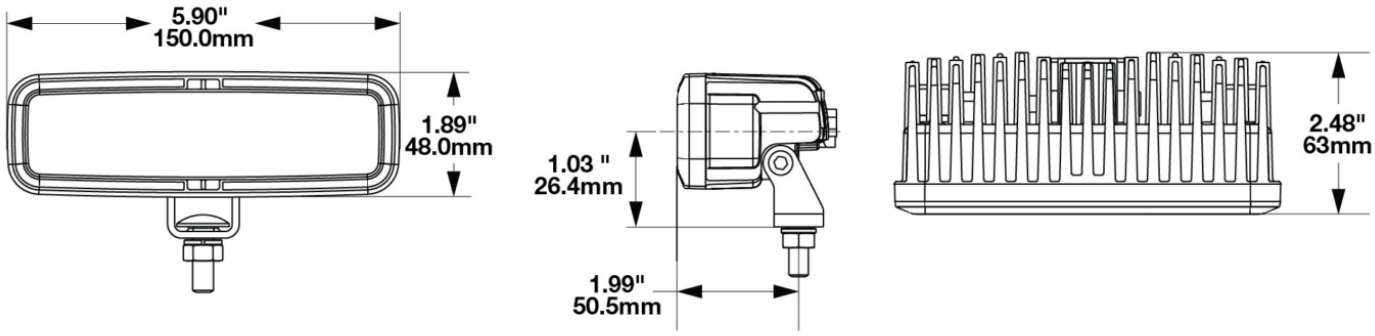

ELECTRICAL SPECIFICATIONS

Input Voltage	12V DC
Operating Voltage	10-18V DC
Red Wire	Power
Black Wire	Ground
Current Draw	0.55A @ 10V DC (Fog) 0.88A @ 12V DC (Fog) 1.10A @ 18V DC (Fog)

REGULATORY STANDARDS COMPLIANCE



Buy America Standards	ECE Reg 19
Eco Friendly	IEC IP69K
SAE J578	SAE J583

Print date: 2026-11-26

© 2026 J.W. Speaker Corporation • Germantown, WI U.S.A.

www.jwspeaker.com • speaker@jwspeaker.com • 262.251.6660

J.W. SPEAKER® Engineered. Lighting. Solutions.

PART NUMBER 1603601

LED Work Light – Model 791

PHOTOMETRIC SPECIFICATIONS

Raw Lumen Output	800
Effective Lumen Output	250
Candela Output	6,700
Nominal LED Color Temperature	4750 K
Beam Pattern(s)	Forward Lighting - Fog

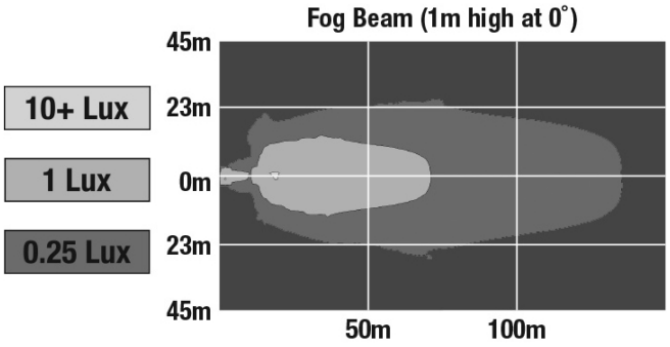

APPLICATIONS



PRODUCT WARNINGS

For California residents:
⚠ **WARNING:** Cancer and reproductive harm - www.P65Warnings.ca.gov.
⚠ **AVERTISSEMENT:** Cancer et effet nocif sur la reproduction - www.P65Warnings.ca.gov.

ACCESSORIES



Part Number 8201241
DIN Pole Mount for Work Lights

Print date: 2026-11-26
© 2026 J.W. Speaker Corporation • Germantown, WI U.S.A.
www.jwspeaker.com • speaker@jwspeaker.com • 262.251.6660

J.W. SPEAKER® Engineered. Lighting. Solutions.

LED Work Light – Model 791

RELATED PRODUCTS



Part Number 1603511
12-24V LED Driving Light



Part Number 1603521
12-24V LED Driving Light with Flood Beam Pattern



Part Number 1603603
12V DOT/ECE LED Fog Light - 2 Light Kit

© 2026 J.W. Speaker Corporation • Germantown, WI U.S.A.
www.jwspeaker.com • speaker@jwspeaker.com • 262.251.6660

J.W. SPEAKER® Engineered. Lighting. Solutions.