PART NUMBER 1603511

LED Work Light – Model 791

PRODUCT INFORMATION

Description	12-24V LED Driving Light
Height	48.00 mm / 1.89 in
Width	150.00 mm / 5.91 in
Depth	62.90 mm / 2.48 in
Shape	Rectangular
Outer Lens Material	Polycarbonate
Outer Lens Color	Clear
Housing Material	Aluminum
Housing Color	Black
Bezel Color	Chrome
Mounting Hardware Description	(x1) 8mm-20 x 25mm Bracket
Mounting Type	Pedestal
Minimum Operating Temperature	-40 °C / -40 °F
Maximum Operating Temperature	65 °C / 149 °F
Connector or Wiring	Deutsch DT04-2P
Mating Connector	Deutsch DT06-2S
Product Weight	0.91 lbs / 0.41 kgs
Shipping Weight	1.10 lbs / 0.5 kgs



Print date: 2026-11-26

© 2026 J.W. Speaker Corporation • Germantown, WI U.S.A.

www.jwspeaker.com • speaker@jwspeaker.com • 262.251.6660

J.W. SPEAKER® Engineered. Lighting. Solutions.

PART NUMBER 1603511

LED Work Light – Model 791

PRODUCT DIMENSIONS

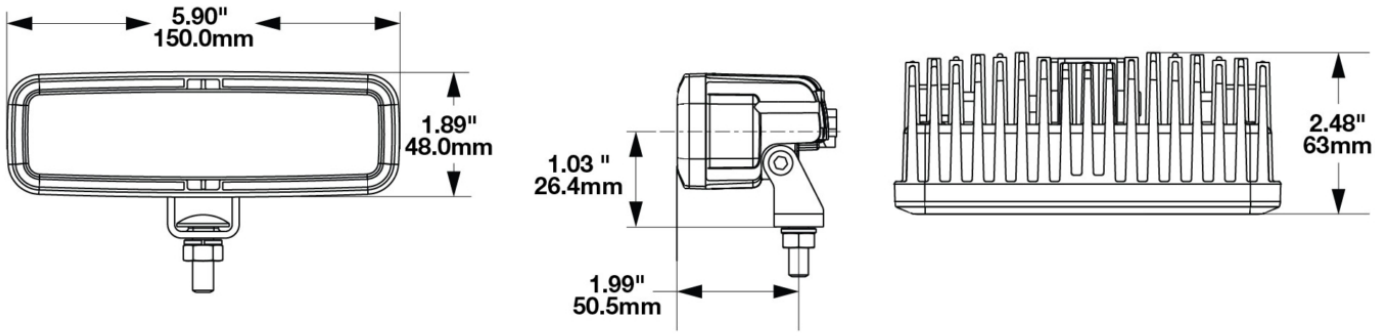

ELECTRICAL SPECIFICATIONS

Input Voltage	12-24V DC
Operating Voltage	9-32V DC
Transient Spike Protection	150V Peak @ 1 HZ-100 Pulses
Current Draw	1.27A @ 12V DC 0.78A @ 24V DC

REGULATORY STANDARDS COMPLIANCE



Buy America Standards

Eco Friendly

IEC IP67

Print date: 2026-11-26

© 2026 J.W. Speaker Corporation • Germantown, WI U.S.A.

www.jwspeaker.com • speaker@jwspeaker.com • 262.251.6660

J.W. SPEAKER® Engineered. Lighting. Solutions.

PART NUMBER 1603511

LED Work Light – Model 791

PHOTOMETRIC SPECIFICATIONS

Raw Lumen Output	1,820
Effective Lumen Output	1,150
Nominal LED Color Temperature	5000 K
Beam Pattern(s)	Forward Lighting - Driving

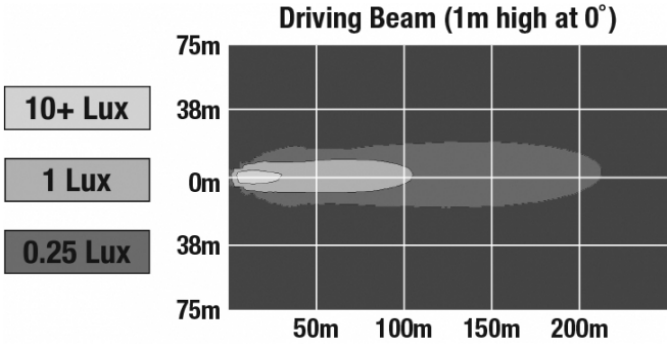

APPLICATIONS



PRODUCT WARNINGS

For California residents:
⚠ **WARNING:** Cancer and reproductive harm - www.P65Warnings.ca.gov.
⚠ **AVERTISSEMENT:** Cancer et effet nocif sur la reproduction - www.P65Warnings.ca.gov.

ACCESSORIES



Part Number 8201241
DIN Pole Mount for Work Lights

© 2026 J.W. Speaker Corporation • Germantown, WI U.S.A.
www.jwspeaker.com • speaker@jwspeaker.com • 262.251.6660

J.W. SPEAKER® Engineered. Lighting. Solutions.

LED Work Light – Model 791

RELATED PRODUCTS



Part Number 1603521
12-24V LED Driving Light with Flood Beam Pattern



Part Number 1603601
12V DOT/ECE LED Fog Light



Part Number 1603603
12V DOT/ECE LED Fog Light - 2 Light Kit

© 2026 J.W. Speaker Corporation • Germantown, WI U.S.A.
www.jwspeaker.com • speaker@jwspeaker.com • 262.251.6660

J.W. SPEAKER® Engineered. Lighting. Solutions.