PART NUMBER 0554213

LED Work Light - Model 785

PRODUCT INFORMATION

Description	12V LED Work Light with Trapezoid Beam Pattern - 2 Light Kit
Height	82.00 mm / 3.23 in
Width	124.00 mm / 4.88 in
Depth	62.00 mm / 2.44 in
Shape	Rectangular
Outer Lens Material	Polycarbonate
Outer Lens Color	Clear
Housing Material	Nylon 66
Housing Color	Black
Minimum Operating Temperature	-40 °C / -40 °F
Maximum Operating Temperature	65 °C / 149 °F
Connector or Wiring	Integral Connector
Mating Connector	PE 12124819, or 12020599
Product Weight	0.66 lbs / 0.3 kgs
Shipping Weight	0.95 lbs / 0.43 kgs



PRODUCT DIMENSIONS

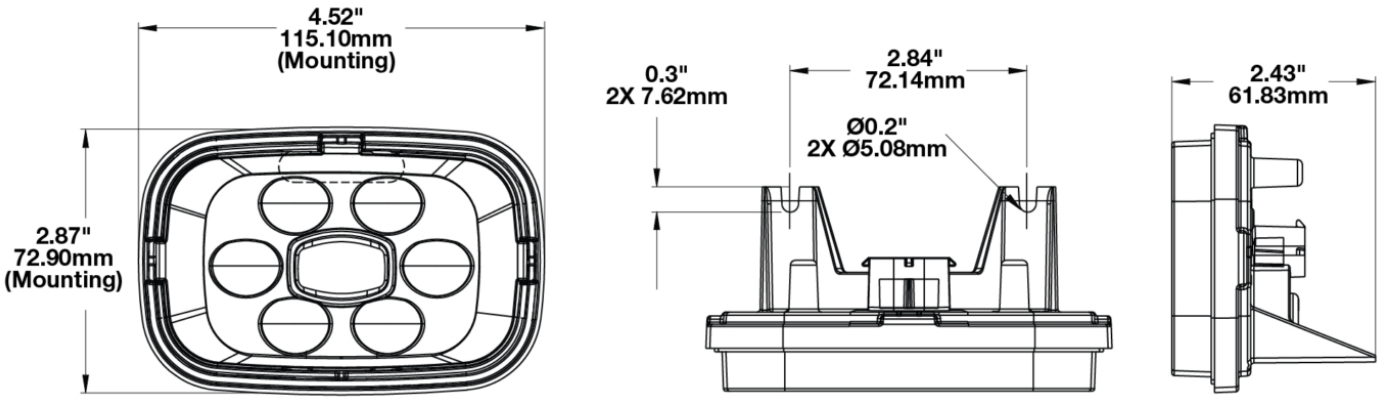

© 2026 J.W. Speaker Corporation • Germantown, WI U.S.A.
www.jwspeaker.com • speaker@jwspeaker.com • 262.251.6660

J.W. SPEAKER
Engineered. Lighting. Solutions.

PART NUMBER 0554213

LED Work Light - Model 785

ELECTRICAL SPECIFICATIONS

Input Voltage	12V DC
Operating Voltage	9-16V DC
Transient Spike Protection	150V Peak @ 1 HZ-100 Pulses

REGULATORY STANDARDS COMPLIANCE



Buy America Standards
IEC IP67

Eco Friendly
IEC IP69K

PHOTOMETRIC SPECIFICATIONS

Raw Lumen Output	1,242
Effective Lumen Output	460
Candela Output	1,380
Nominal LED Color Temperature	5000 K
Beam Pattern(s)	Forward Lighting - Trapezoid

APPLICATIONS



© 2026 J.W. Speaker Corporation • Germantown, WI U.S.A.
www.jwspeaker.com • speaker@jwspeaker.com • 262.251.6660

J.W. SPEAKER® Engineered. Lighting. Solutions.

LED Work Light - Model 785

PRODUCT WARNINGS

For California residents:
⚠ **WARNING:** Cancer and reproductive harm - www.P65Warnings.ca.gov.
⚠ **AVERTISSEMENT:** Cancer et effet nocif sur la reproduction - www.P65Warnings.ca.gov.

RELATED PRODUCTS



Part Number 0554211
12V LED Work Light with Trapezoid Beam Pattern

© 2026 J.W. Speaker Corporation • Germantown, WI U.S.A.
www.jwspeaker.com • speaker@jwspeaker.com • 262.251.6660

J.W. SPEAKER® Engineered. Lighting. Solutions.