PART NUMBER 0647131

LED Strobe Safety Warning Lights - Model 539

PRODUCT INFORMATION

Description	12/80V Red/Green LED Indicator Light with Flange Mount
Height	66.10 mm / 2.6 in
Width	70.80 mm / 2.79 in
Depth	70.80 mm / 2.79 in
Shape	Round
Outer Lens Material	Acrylic
Outer Lens Color	Diffuse
Housing Material	Polycarbonate
Housing Color	Black
Mounting Type	Flange Mount
Minimum Operating Temperature	-40 °C / -40 °F
Maximum Operating Temperature	65 °C / 149 °F
Connector or Wiring	13.5" Bare Leads
Product Weight	0.30 lbs / 0.14 kgs
Shipping Weight	0.45 lbs / 0.2 kgs



MODEL 539

PRODUCT DIMENSIONS

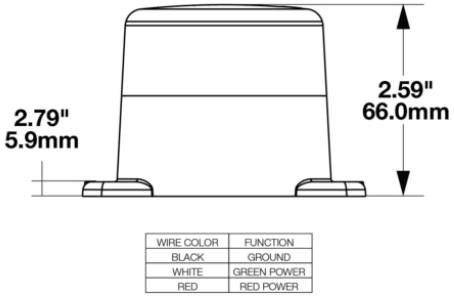

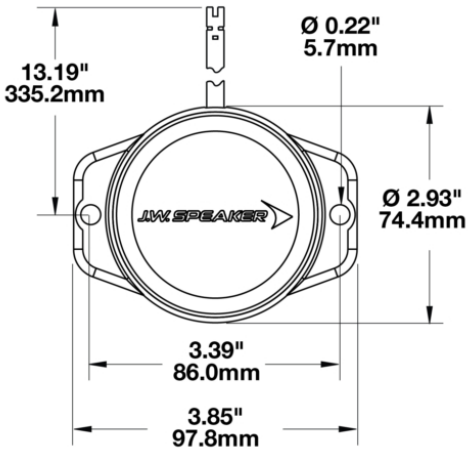

Print date: 2026-11-24

© 2026 J.W. Speaker Corporation • Germantown, WI U.S.A.

www.jwspeaker.com • speaker@jwspeaker.com • 262.251.6660

J.W. SPEAKER® Engineered. Lighting. Solutions.

PART NUMBER 0647131

LED Strobe Safety Warning Lights - Model 539

ELECTRICAL SPECIFICATIONS

Input Voltage	12-80V DC
Operating Voltage	12-80V DC
Red Wire	Red LED
White Wire	Green LED
Black Wire	Ground
Current Draw	0.178A @ 12V DC (Red LED) 0.188A @ 12V DC (Green LED) 0.073A @ 48V DC (Red LED) 0.076A @ 48V DC (Green LED) 0.067A @ 80V DC (Red LED) 0.068A @ 80V DC (Green LED)

APPLICATIONS



PRODUCT WARNINGS

For California residents:
⚠ **WARNING:** Cancer and reproductive harm - www.P65Warnings.ca.gov.
⚠ **AVERTISSEMENT:** Cancer et effet nocif sur la reproduction - www.P65Warnings.ca.gov.

© 2026 J.W. Speaker Corporation • Germantown, WI U.S.A.
www.jwspeaker.com • speaker@jwspeaker.com • 262.251.6660

J.W. SPEAKER® Engineered. Lighting. Solutions.

LED Strobe Safety Warning Lights - Model 539

RELATED PRODUCTS



Part Number 0646441
12-80V Amber Class II LED Strobe Light with Flange Mount



Part Number 0646451
12-80V Red Class III LED Strobe Light with Flange Mount



Part Number 0646461
12-80V Green Class III LED Strobe Light with Flange Mount



Part Number 0646471
12-80V Blue Class III LED Strobe Light with Flange Mount



Part Number 0646481
12-80V White Class III LED Strobe Light with Flange Mount

© 2026 J.W. Speaker Corporation • Germantown, WI U.S.A.
www.jwspeaker.com • speaker@jwspeaker.com • 262.251.6660

J.W. SPEAKER® Engineered. Lighting. Solutions.