PART NUMBER 0646431

LED Strobe Safety Warning Lights - Model 538

PRODUCT INFORMATION

Description	12-80V White Class III LED Strobe Light with Pipe Mount
Height	91.60 mm / 3.61 in
Width	70.80 mm / 2.79 in
Depth	70.80 mm / 2.79 in
Shape	Round
Outer Lens Material	Acrylic
Outer Lens Color	Clear
Housing Material	Polycarbonate
Housing Color	Black
Mounting Hardware Description	1/2 INCH NPT-
Mounting Type	Pipe Mount
Minimum Operating Temperature	-40 °C / -40 °F
Maximum Operating Temperature	65 °C / 149 °F
Connector or Wiring	13.5" Bare Leads
Product Weight	0.30 lbs / 0.14 kgs
Shipping Weight	1.51 lbs / 0.68 kgs



MODEL 538

PRODUCT DIMENSIONS

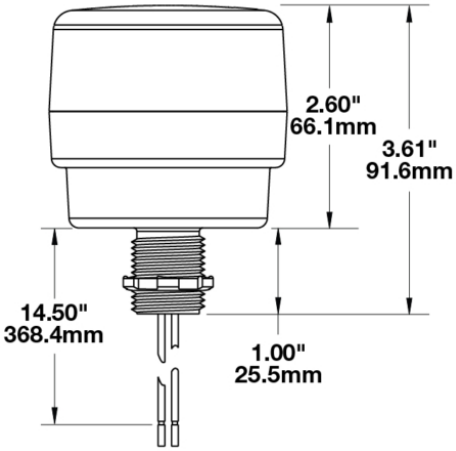

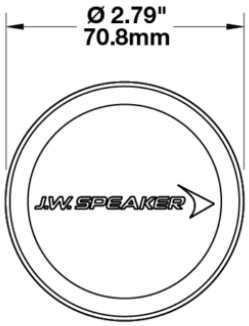

Print date: 2026-11-25
© 2026 J.W. Speaker Corporation • Germantown, WI U.S.A.
www.jwspeaker.com • speaker@jwspeaker.com • 262.251.6660

J.W. SPEAKER Engineered. Lighting. Solutions.

PART NUMBER 0646431

LED Strobe Safety Warning Lights - Model 538

ELECTRICAL SPECIFICATIONS

Input Voltage	12-80V DC
Operating Voltage	12-80V DC
Red Wire	Positive
Black Wire	Negative
Current Draw	0.256A @ 12V DC 0.088A @ 48V DC 0.076A @ 80V DC

REGULATORY STANDARDS COMPLIANCE



Buy America Standards
SAE J845

Eco Friendly
UL Recognized

PHOTOMETRIC SPECIFICATIONS

Beam Pattern(s)	Warning - Strobe
Flash Rate 1	60 +/- 10 fpm

APPLICATIONS



Print date: 2026-11-25

© 2026 J.W. Speaker Corporation • Germantown, WI U.S.A.

www.jwspeaker.com • speaker@jwspeaker.com • 262.251.6660

J.W. SPEAKER®
Engineered. Lighting. Solutions.

LED Strobe Safety Warning Lights - Model 538

PRODUCT WARNINGS

For California residents:
⚠ **WARNING:** Cancer and reproductive harm - www.P65Warnings.ca.gov.
⚠ **AVERTISSEMENT:** Cancer et effet nocif sur la reproduction - www.P65Warnings.ca.gov.

RELATED PRODUCTS



Part Number 0646391
12-80V Amber Class II LED Strobe Light with Pipe Mount



Part Number 0646401
12-80V Red Class III LED Strobe Light with Pipe Mount



Part Number 0646411
12-80V Green Class III LED Strobe Light with Pipe Mount



Part Number 0646421
12-80V Blue Class III LED Strobe Light with Pipe Mount



Part Number 0647121
12/80V Red/Green LED Indicator Light with Pipe Mount

Print date: 2026-11-25
© 2026 J.W. Speaker Corporation • Germantown, WI U.S.A.
www.jwspeaker.com • speaker@jwspeaker.com • 262.251.6660

J.W. SPEAKER® Engineered. Lighting. Solutions.