**PART NUMBER 0646401**

# LED Strobe Safety Warning Lights - Model 538

## PRODUCT INFORMATION

| | |
|---|---|
| **Description** | 12-80V Red Class III LED Strobe Light with Pipe Mount |
| **Height** | 91.60 mm / 3.61 in |
| **Width** | 70.80 mm / 2.79 in |
| **Depth** | 70.80 mm / 2.79 in |
| **Shape** | Round |
| **Outer Lens Material** | Acrylic |
| **Outer Lens Color** | Clear |
| **Housing Material** | Polycarbonate |
| **Housing Color** | Black |
| **Mounting Hardware Description** | 1/2 INCH NPT- |
| **Mounting Type** | Pipe Mount |
| **Minimum Operating Temperature** | -40 °C / -40 °F |
| **Maximum Operating Temperature** | 65 °C / 149 °F |
| **Connector or Wiring** | 13.5" Bare Leads |
| **Product Weight** | 0.30 lbs / 0.14 kgs |
| **Shipping Weight** | 1.51 lbs / 0.68 kgs |



MODEL 538

## PRODUCT DIMENSIONS

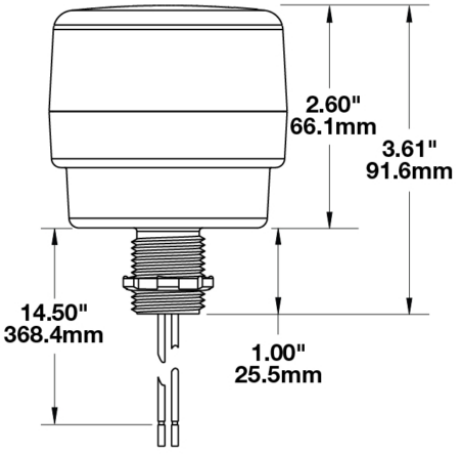


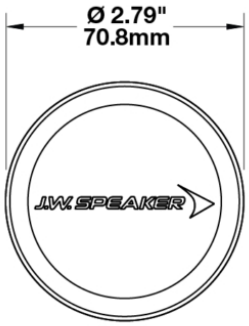


**Print date: 2026-11-27**
© 2026 J.W. Speaker Corporation • Germantown, WI U.S.A.
www.jwspeaker.com • speaker@jwspeaker.com • 262.251.6660

J.W. SPEAKER® Engineered. Lighting. Solutions.

PART NUMBER 0646401

# LED Strobe Safety Warning Lights - Model 538

## ELECTRICAL SPECIFICATIONS

| | |
|---|---|
| **Input Voltage** | 12-80V DC |
| **Operating Voltage** | 12-80V DC |
| **Red Wire** | Positive |
| **Black Wire** | Negative |
| **Current Draw** | 0.256A @ 12V DC<br>0.088A @ 48V DC<br>0.076A @ 80V DC |

## REGULATORY STANDARDS COMPLIANCE




Buy America Standards

Eco Friendly

UL Recognized

## PHOTOMETRIC SPECIFICATIONS

| | |
|---|---|
| **Beam Pattern(s)** | Warning - Strobe |
| **Flash Rate 1** | 60 +/- 10 fpm |

## APPLICATIONS




**Print date: 2026-11-27**

© 2026 J.W. Speaker Corporation • Germantown, WI U.S.A.

www.jwspeaker.com • speaker@jwspeaker.com • 262.251.6660

J.W. SPEAKER® Engineered. Lighting. Solutions.

# LED Strobe Safety Warning Lights - Model 538

## PRODUCT WARNINGS

For California residents:
⚠ **WARNING:** Cancer and reproductive harm - www.P65Warnings.ca.gov.
⚠ **AVERTISSEMENT:** Cancer et effet nocif sur la reproduction - www.P65Warnings.ca.gov.

## RELATED PRODUCTS



**Part Number 0646391**
12-80V Amber Class II LED Strobe Light with Pipe Mount



**Part Number 0646411**
12-80V Green Class III LED Strobe Light with Pipe Mount



**Part Number 0646421**
12-80V Blue Class III LED Strobe Light with Pipe Mount



**Part Number 0646431**
12-80V White Class III LED Strobe Light with Pipe Mount



**Part Number 0647121**
12/80V Red/Green LED Indicator Light with Pipe Mount


© 2026 J.W. Speaker Corporation • Germantown, WI U.S.A.
www.jwspeaker.com • speaker@jwspeaker.com • 262.251.6660

J.W. SPEAKER® Engineered. Lighting. Solutions.