PART NUMBER 0645761

LED Strobe Warning Light and Safety Light - Model 284

PRODUCT INFORMATION

Description	12-48V SAE LED Blue Strobe Light
Height	215.90 mm / 8.5 in
Width	49.53 mm / 1.95 in
Depth	43.69 mm / 1.72 in
Shape	Rectangular
Outer Lens Material	Acrylic
Outer Lens Color	Clear
Housing Material	ABS
Housing Color	Black
Mounting Type	Low Profile Mount
Minimum Operating Temperature	-40 °C / -40 °F
Maximum Operating Temperature	65 °C / 149 °F
Connector or Wiring	9" Bare Leads
Product Weight	0.40 lbs / 0.18 kgs
Shipping Weight	9.10 lbs / 4.13 kgs



PRODUCT DIMENSIONS

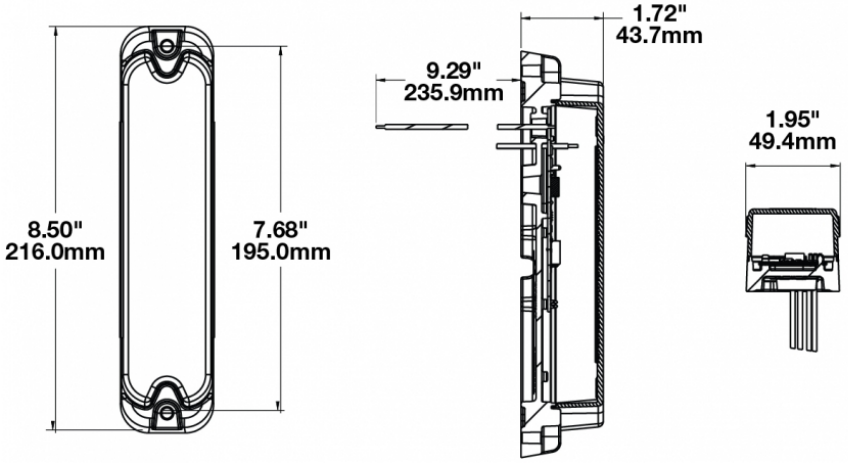

© 2026 J.W. Speaker Corporation • Germantown, WI U.S.A.
www.jwspeaker.com • speaker@jwspeaker.com • 262.251.6660

J.W. SPEAKER® Engineered. Lighting. Solutions.

PART NUMBER 0645761

LED Strobe Warning Light and Safety Light - Model 284

ELECTRICAL SPECIFICATIONS

Input Voltage	12-48V DC
Red Wire	Positive
Black Wire	Negative
Current Draw	0.50A @ 12V DC 0.25A @ 24V DC 0.175A @ 36V DC 0.125A @ 48V DC

REGULATORY STANDARDS COMPLIANCE



Buy America Standards
IEC IP67

Eco Friendly
SAE J845

PHOTOMETRIC SPECIFICATIONS

Beam Pattern(s)	Warning - Strobe

APPLICATIONS



PRODUCT WARNINGS

For California residents:
⚠ **WARNING:** Cancer and reproductive harm - www.P65Warnings.ca.gov.
⚠ **AVERTISSEMENT:** Cancer et effet nocif sur la reproduction - www.P65Warnings.ca.gov.

© 2026 J.W. Speaker Corporation • Germantown, WI U.S.A.
www.jwspeaker.com • speaker@jwspeaker.com • 262.251.6660

J.W. SPEAKER® Engineered. Lighting. Solutions.

LED Strobe Warning Light and Safety Light - Model 284

RELATED PRODUCTS



Part Number 0645661
12-48V SAE LED
Amber Strobe Light

© 2026 J.W. Speaker Corporation • Germantown, WI U.S.A.
www.jwspeaker.com • speaker@jwspeaker.com • 262.251.6660

J.W. SPEAKER® Engineered. Lighting. Solutions.