PART NUMBER 0343141

LED Stop, Tail & Turn Lights - Model 236

PRODUCT INFORMATION

Description	12-24V ECE LED Stop, Tail & Turn Signal Light with License Plate Illuminator
Height	116.33 mm / 4.58 in
Width	120.40 mm / 4.74 in
Depth	36.32 mm / 1.43 in
Shape	Square
Outer Lens Material	Acrylic
Outer Lens Color	Red
Housing Material	Impact-Resistant Nylon
Housing Color	Black
Mounting Type	Low Profile Mount
Minimum Operating Temperature	-40 °C / -40 °F
Maximum Operating Temperature	65 °C / 149 °F
Mating Connector	4-Pin Deutsch Plug (DT06-4S)
Product Weight	0.66 lbs / 0.3 kgs
Shipping Weight	0.89 lbs / 0.4 kgs



PRODUCT DIMENSIONS

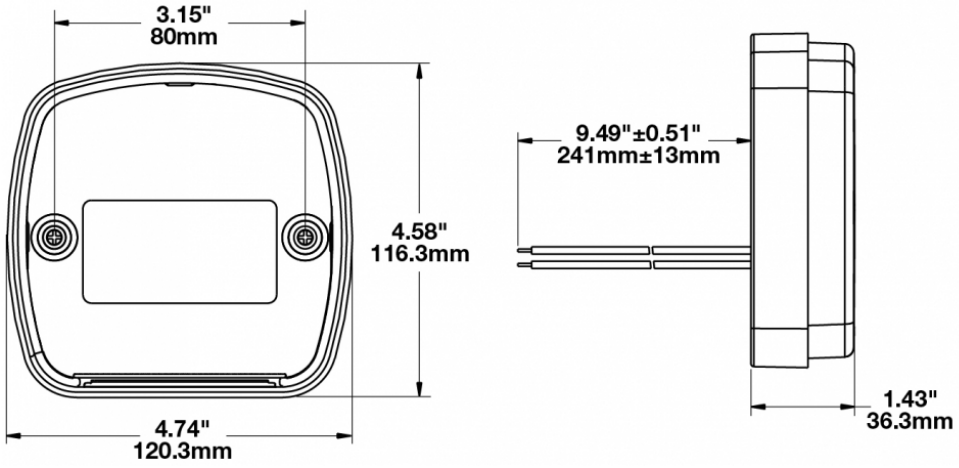

© 2026 J.W. Speaker Corporation • Germantown, WI U.S.A.
www.jwspeaker.com • speaker@jwspeaker.com • 262.251.6660

J.W. SPEAKER® Engineered. Lighting. Solutions.

PART NUMBER 0343141

LED Stop, Tail & Turn Lights - Model 236

ELECTRICAL SPECIFICATIONS

Input Voltage	12-24V DC
Red Wire	Stop
White Wire	Tail
Yellow Wire	Turn
Black Wire	Ground
Current Draw	0.350A @ 12V DC (Stop) 0.130A @ 12V DC (Tail) 1.300 A @ 12V DC (Turn)

REGULATORY STANDARDS COMPLIANCE



Buy America Standards
ECE Reg 3
ECE Reg 4
ECE Reg 6
ECE Reg 7
Eco Friendly
IEC IP67

PHOTOMETRIC SPECIFICATIONS

Beam Pattern(s)	Signalization - Stop Signalization - Tail Signalization - Turn (Front)

© 2026 J.W. Speaker Corporation • Germantown, WI U.S.A.
www.jwspeaker.com • speaker@jwspeaker.com • 262.251.6660

J.W. SPEAKER® Engineered. Lighting. Solutions.

PART NUMBER 0343141

LED Stop, Tail & Turn Lights - Model 236

APPLICATIONS



PRODUCT WARNINGS

For California residents:
⚠ **WARNING:** Cancer and reproductive harm - www.P65Warnings.ca.gov.
⚠ **AVERTISSEMENT:** Cancer et effet nocif sur la reproduction - www.P65Warnings.ca.gov.

RELATED PRODUCTS



Part Number 0343151
12-24V ECE LED Stop, Tail & Turn Signal Light without License Plate Illuminator

© 2026 J.W. Speaker Corporation • Germantown, WI U.S.A.
www.jwspeaker.com • speaker@jwspeaker.com • 262.251.6660

J.W. SPEAKER® Engineered. Lighting. Solutions.