PART NUMBER 0348641

LED Stop, Tail, Turn & Backup Lights - Model 260

PRODUCT INFORMATION

Description	12-24V ECE LED Stop, Tail, Direction Indicator, Rear Fog & Reverse Light w/ Post Mount & Clear Lens
Height	52.45 mm / 2.06 in
Width	274.82 mm / 10.82 in
Depth	39.58 mm / 1.56 in
Shape	Stylized
Outer Lens Material	PMMA
Outer Lens Color	Clear
Housing Material	PC+ABS
Housing Color	Black
Bezel Color	NA
Mounting Hardware Description	0.25" push nut (2)
Mounting Type	Panel
Minimum Operating Temperature	-40 °C / -40 °F
Maximum Operating Temperature	65 °C / 149 °F
Mating Connector	JWS 5743090 DEUTSCH DT06-6P
Product Weight	0.42 lbs / 0.19 kgs
Shipping Weight	0.67 lbs / 0.3 kgs





© 2026 J.W. Speaker Corporation • Germantown, WI U.S.A.
www.jwspeaker.com • speaker@jwspeaker.com • 262.251.6660

J.W. SPEAKER® Engineered. Lighting. Solutions.

LED Stop, Tail, Turn & Backup Lights - Model 260

PRODUCT DIMENSIONS

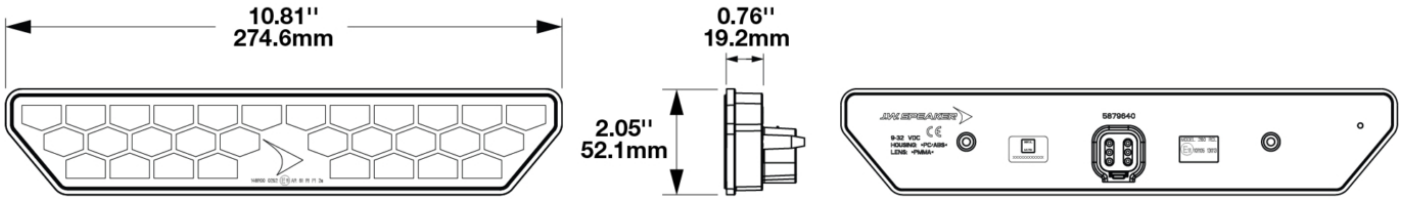

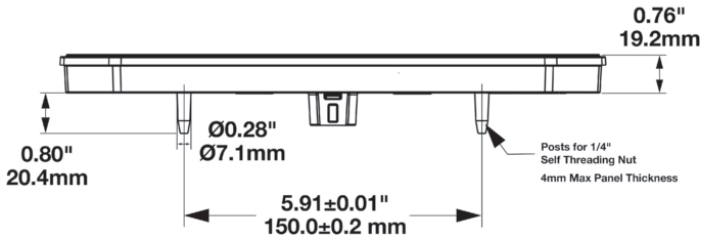

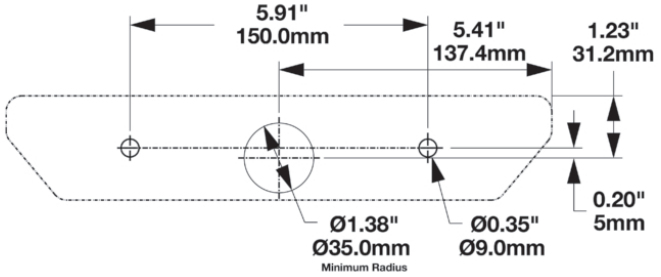

Connector Pin-Out	Light Function
PIN 1	Turn
PIN 2	Ground
PIN 3	Stop/Fog
PIN 4	Fog/Stop
PIN 5	Tail
PIN 6	Back

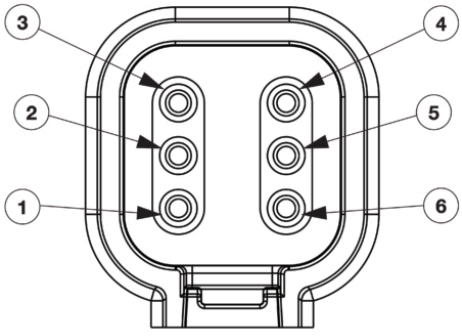

Print date: 2026-11-23

© 2026 J.W. Speaker Corporation • Germantown, WI U.S.A.

www.jwspeaker.com • speaker@jwspeaker.com • 262.251.6660

J.W. SPEAKER
Engineered. Lighting. Solutions.

PART NUMBER 0348641

LED Stop, Tail, Turn & Backup Lights - Model 260

ELECTRICAL SPECIFICATIONS

Input Voltage	12-24V DC
Operating Voltage	9-30V DC
Current Draw	0.34A @ 12V DC (Stop) 0.18A @ 12V DC (Turn) 0.33A @ 12V DC (Fog) 0.04A @ 12V DC (Tail) 0.74A @ 12V DC (Backup) 0.17A @ 24V DC (Stop) 0.09A @ 24V DC (Turn) 0.165A @ 24V DC (Fog) 0.02A @ 24V DC (Tail) 0.187A @ 24V DC (Backup)

REGULATORY STANDARDS COMPLIANCE



ECE Reg 10
ECE Reg 148 - 2a
ECE Reg 148 - AR
ECE Reg 148 - F1
ECE Reg 148 - R1
ECE Reg 148 - S1
IEC IP67
IEC IP69K
ISO 13207-1

PHOTOMETRIC SPECIFICATIONS

Beam Pattern(s)	Signalization - Rear Fog Signalization - Stop Signalization - Tail Signalization - Turn (Rear)

© 2026 J.W. Speaker Corporation • Germantown, WI U.S.A.
www.jwspeaker.com • speaker@jwspeaker.com • 262.251.6660

J.W. SPEAKER® Engineered. Lighting. Solutions.

LED Stop, Tail, Turn & Backup Lights - Model 260

PRODUCT WARNINGS

For California residents:
⚠ **WARNING:** Cancer and reproductive harm - www.P65Warnings.ca.gov.
⚠ **AVERTISSEMENT:** Cancer et effet nocif sur la reproduction - www.P65Warnings.ca.gov.

ACCESSORIES



Part Number 8201391
MODEL 260/905 15°
MOUNTING BEZEL

© 2026 J.W. Speaker Corporation • Germantown, WI U.S.A.
www.jwspeaker.com • speaker@jwspeaker.com • 262.251.6660

LED Stop, Tail, Turn & Backup Lights - Model 260

RELATED PRODUCTS



Part Number 0348581
12-24V SAE/ECE LED Stop & Tail Light w/ Flange Mount & Red Lens



Part Number 0348591
12-24V SAE/ECE LED Stop & Tail Light w/ Post Mount & Red Lens



Part Number 0348601
12-24V SAE/ECE LED Directional Indicator w/ Flange Mount & Amber Lens



Part Number 0348611
12-24V SAE/ECE LED Directional Indicator w/ Post Mount & Amber Lens



Part Number 0348631
12-24V ECE Stop, Tail, Direction Indicator, Rear Fog, Reverse Light w/ Flange Mount & Clear Lens



Part Number 0348691
12-24V SAE LED Front Position & Direction Indicator w/ Flange Mount & Amber Lens



Part Number 0348701
12-24V SAE LED Front Position & Directional Indicator w/ Post Mount & Amber Lens



Part Number 0443721
12-24V SAE/ECE LED Reverse Light w/ Flange Mount & Clear Lens

© 2026 J.W. Speaker Corporation • Germantown, WI U.S.A.
www.jwspeaker.com • speaker@jwspeaker.com • 262.251.6660

J.W. SPEAKER® Engineered. Lighting. Solutions.