PART NUMBER 0343211

LED Stop Lights & Tail Lights - Model 6042

PRODUCT INFORMATION

Description	12-24V SAE LED Stop & Tail Light
Height	113.03 mm / 4.45 in
Width	113.03 mm / 4.45 in
Depth	43.18 mm / 1.7 in
Shape	Round
Outer Lens Material	Polycarbonate
Outer Lens Color	Clear
Housing Material	Die-Cast Aluminum
Housing Color	Black
Retrofits	PAR36
Minimum Operating Temperature	-40 °C / -40 °F
Maximum Operating Temperature	65 °C / 149 °F
Mating Connector	Female Terminal Mole1 ETC AA-2140 T or #8 Ring Terminal
Product Weight	0.49 lbs / 0.22 kgs
Shipping Weight	10.35 lbs / 4.69 kgs



PRODUCT DIMENSIONS

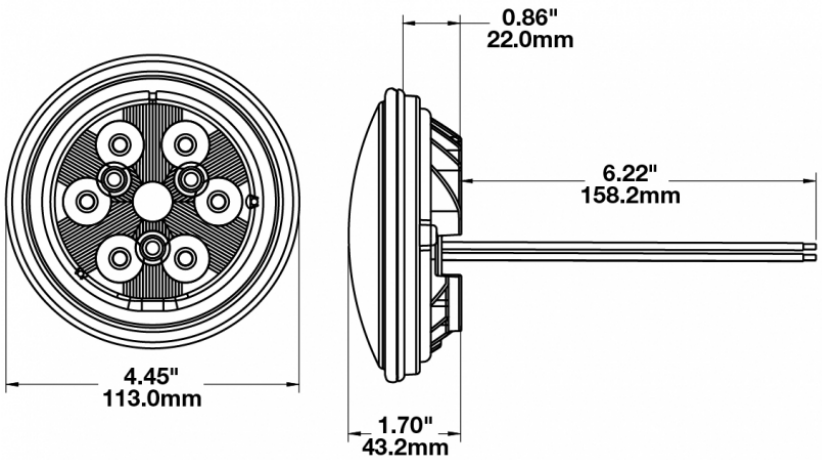

© 2026 J.W. Speaker Corporation • Germantown, WI U.S.A.
www.jwspeaker.com • speaker@jwspeaker.com • 262.251.6660

J.W. SPEAKER® Engineered. Lighting. Solutions.

PART NUMBER 0343211

LED Stop Lights & Tail Lights - Model 6042

ELECTRICAL SPECIFICATIONS

Input Voltage	12-24V DC
Red Wire	Stop
White Wire	Tail
Black Wire	Ground
Current Draw	0.165A @ 12V DC (Stop) 0.180A @ 24V DC (Stop) 0.012A @ 12V DC (Tail) 0.012A @ 24V DC (Tail)

REGULATORY STANDARDS COMPLIANCE

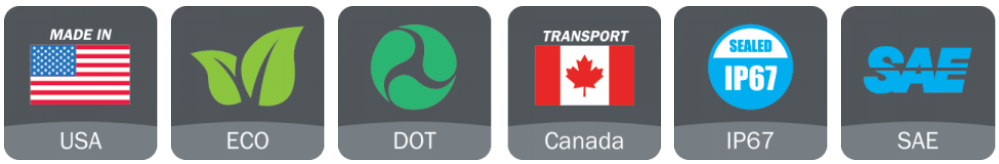

Buy America Standards
FMVSS 108 s7.2 (Table VIII)
IEC IP67
SAE J586

Eco Friendly
FMVSS 108 s7.3 (Table IX)
SAE J585

PHOTOMETRIC SPECIFICATIONS

Nominal LED Color Temperature	5000 K

© 2026 J.W. Speaker Corporation • Germantown, WI U.S.A.
www.jwspeaker.com • speaker@jwspeaker.com • 262.251.6660

J.W. SPEAKER® Engineered. Lighting. Solutions.

PART NUMBER 0343211

LED Stop Lights & Tail Lights - Model 6042

APPLICATIONS



PRODUCT WARNINGS

For California residents:
⚠ **WARNING:** Cancer and reproductive harm - www.P65Warnings.ca.gov.
⚠ **AVERTISSEMENT:** Cancer et effet nocif sur la reproduction - www.P65Warnings.ca.gov.

© 2026 J.W. Speaker Corporation • Germantown, WI U.S.A.
www.jwspeaker.com • speaker@jwspeaker.com • 262.251.6660

J.W. SPEAKER® Engineered. Lighting. Solutions.