LED Headlight - Model 9800

PRODUCT INFORMATION

Description	12V ECE LED LHT Heated Headlight - 2 Light Kit
Height	94.53 mm / 3.72 in
Width	291.58 mm / 11.48 in
Depth	133.17 mm / 5.24 in
Shape	Rectangular
Outer Lens Material	Polycarbonate
Outer Lens Color	Clear
Housing Material	Xenoy
Housing Color	Black
Bezel Color	Black
Mounting Hardware Description	(x8) M8 - 1.25-25 mm SS CARRIAGE BOLT
Mounting Type	Universal Pedestal Mount
Connector or Wiring	6-Pin Delphi (#12052848)
Mating Connector	Delphi (12052848)

PRODUCT DIMENSIONS

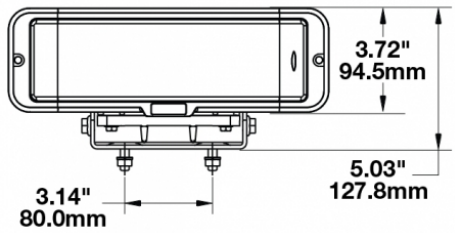

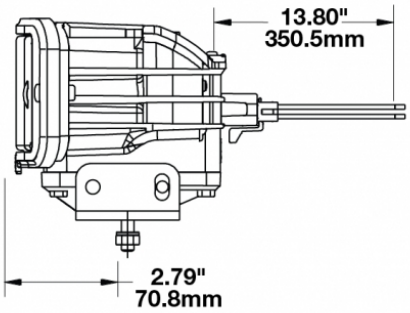

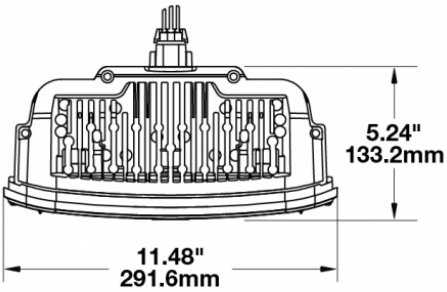

Print date: 2017-03-31

© 2017 J.W. Speaker Corporation • Germantown, WI U.S.A.

www.jwspeaker.com • speaker@jwspeaker.com • 262.251.6660

J.W. SPEAKER®
Engineered. Lighting. Solutions.

LED Headlight - Model 9800

ELECTRICAL SPECIFICATIONS

Input Voltage	12 V
Operating Voltage	8-15 V
Red Wire	Front Position
Black Wire	Ground
White Wire	High Beam
Yellow Wire	Turn
Blue Wire	DRL
Orange Wire	Low Beam
Current Draw	2.70A @ 12V (Low Beam) 3.60A @ 12V (High Beam) 0.85A @ 12V (Turn Signal) 0.10A @ 12V (Front Position / DRL)

REGULATORY STANDARDS COMPLIANCE

Buy America Standards
ECE Reg 6
ECE Reg 87
ECE Reg 113
ECE Reg 7
Eco Friendly

© 2017 J.W. Speaker Corporation • Germantown, WI U.S.A.
www.jwspeaker.com • speaker@jwspeaker.com • 262.251.6660

J.W. SPEAKER®
Engineered. Lighting. Solutions.

LED Headlight - Model 9800

PHOTOMETRIC SPECIFICATIONS

Raw Lumen Output	2,880 (High Beam); 2,160 (Low Beam)
Effective Lumen Output	1,150 (High Beam); 800 (Low Beam)
Candela Output	52,000
Nominal LED Color Temperature	5000 K
Beam Pattern(s)	Forward Lighting - High Beam (ECE) Forward Lighting - Low Beam (ECE Left Hand) Signalization - Turn (Front)

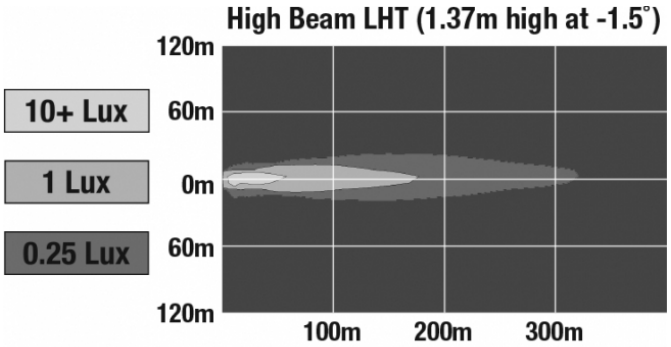

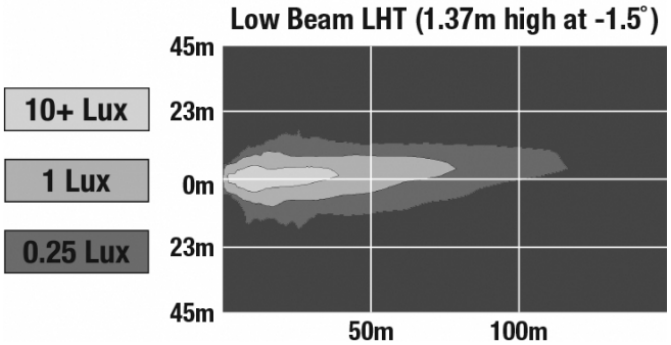

APPLICATIONS

ADDITIONAL INFORMATION

J.W. Speaker's Model 9800 is best suited for normal snow plowing, not "high speed" plowing on highways. Consult with your J.W. Speaker salesperson for more information.

The Model 9800 is not designed to be a plug and play for Boss snow plows. If you have a Boss snow plow please see your local Boss dealer for information on the right product to use.

Lamp design integrates acceptance of mating connector Delphi #1205848

Print date: 2017-03-31

© 2017 J.W. Speaker Corporation • Germantown, WI U.S.A.

www.jwspeaker.com • speaker@jwspeaker.com • 262.251.6660

J.W. SPEAKER®
Engineered. Lighting. Solutions.

LED Headlight - Model 9800

RELATED PRODUCTS

Part Number 0550061
12-24V DOT LED Non-Heated Headlight - 2 Light Kit

Part Number 0550161
12-24V ECE LED RHT Non-Heated Headlight - 2 Light Kit

Part Number 0550171
12-24V ECE LED LHT Non-Heated Headlight - 2 Light Kit

Part Number 0551803
24V DOT LED Heated Headlight - 2 Light Kit

Part Number 0551833
24V ECE LED RHT Heated Headlight - 2 Light Kit

Part Number 0551863
24V ECE LED LHT Heated Headlight - 2 Light Kit

Part Number 0552243
12V DOT LED Heated Headlight - 2 Light Kit

Part Number 0552423
12V ECE LED RHT Heated Headlight - 2 Light Kit

© 2017 J.W. Speaker Corporation • Germantown, WI U.S.A.
www.jwspeaker.com • speaker@jwspeaker.com • 262.251.6660

J.W. SPEAKER®
Engineered. Lighting. Solutions.