PART NUMBER 0345421

LED Signal Lights - Model 217

PRODUCT INFORMATION

Description	12-24V SAE/ECE LED Backup Light without 90mm Mounting Assembly Adapter
Height	72.39 mm / 2.85 in
Width	72.39 mm / 2.85 in
Depth	39.62 mm / 1.56 in
Shape	Round
Outer Lens Material	Polycarbonate
Outer Lens Color	Clear
Housing Material	Polycarbonate
Housing Color	Black
Mounting Hardware Description	(x2) #8-1/2" x Screws
Minimum Operating Temperature	-40 °C / -40 °F
Maximum Operating Temperature	65 °C / 149 °F
Connector or Wiring	610mm Cable
Product Weight	0.20 lbs / 0.09 kgs
Shipping Weight	0.23 lbs / 0.1 kgs

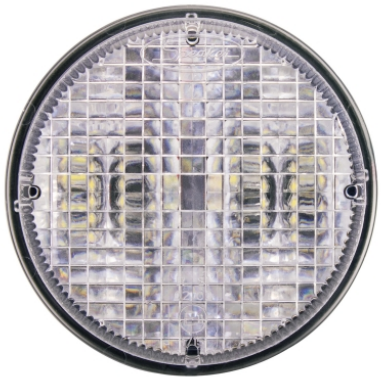

PRODUCT DIMENSIONS

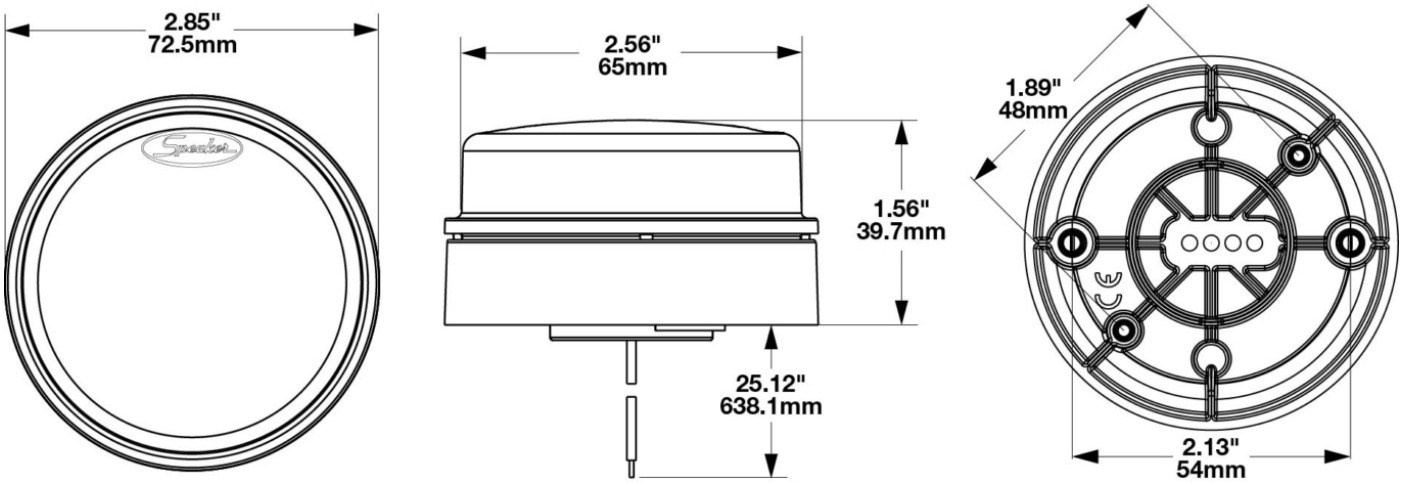

Print date: 2026-11-23
© 2026 J.W. Speaker Corporation • Germantown, WI U.S.A.
www.jwspeaker.com • speaker@jwspeaker.com • 262.251.6660

J.W. SPEAKER
Engineered. Lighting. Solutions.

PART NUMBER 0345421

LED Signal Lights - Model 217

ELECTRICAL SPECIFICATIONS

Input Voltage	12-24V DC
White Wire	Backup
Black Wire	Ground
Current Draw	0.12A @ 12V DC 0.07A @ 24V DC

REGULATORY STANDARDS COMPLIANCE



Buy America Standards
Eco Friendly
IEC IP67
ECE Reg 23
FMVSS 108 s7.6 (Table XII)

PHOTOMETRIC SPECIFICATIONS

Nominal LED Color Temperature	5000 K

APPLICATIONS



Print date: 2026-11-23

© 2026 J.W. Speaker Corporation • Germantown, WI U.S.A.

www.jwspeaker.com • speaker@jwspeaker.com • 262.251.6660

J.W. SPEAKER
Engineered. Lighting. Solutions.

LED Signal Lights - Model 217

PRODUCT WARNINGS

For California residents:
⚠ **WARNING:** Cancer and reproductive harm - www.P65Warnings.ca.gov.
⚠ **AVERTISSEMENT:** Cancer et effet nocif sur la reproduction - www.P65Warnings.ca.gov.

RELATED PRODUCTS



Part Number 0345411
12-24V ECE LED Stop & Tail Light without 90mm Mounting Assembly Adapter

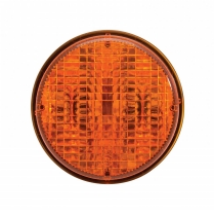

Part Number 0345441
12-24V SAE/ECE LED Turn Signal without 90mm Mounting Assembly Adapter



Part Number 0345451
12-24V SAE/ECE LED DRL & Front Position Light with 90mm Mounting Assembly Adapter



Part Number 0345461
12-24V SAE/ECE LED DRL & Front Position Light without 90mm Mounting Assembly Adapter



Part Number 0345521
12-24V SAE/ECE LED Turn Signal with 90mm Mounting Assembly Adapter

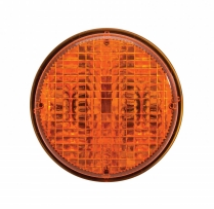

Part Number 0349261
12-24V ECE/SAE LED Turn Signal/Front Position Light without 90mm Mounting Assembly Adapter

© 2026 J.W. Speaker Corporation • Germantown, WI U.S.A.
www.jwspeaker.com • speaker@jwspeaker.com • 262.251.6660

J.W. SPEAKER® Engineered. Lighting. Solutions.