PART NUMBER 0344461

LED Side Turn Signal & Marker Lights - Model 157

PRODUCT INFORMATION

Description	12-24V ECE/SAE LED Amber Side Marker/Side Turn Signal with Mount
Height	128.27 mm / 5.05 in
Width	71.12 mm / 2.8 in
Depth	35.56 mm / 1.4 in
Shape	Rectangular
Outer Lens Material	Acrylic
Outer Lens Color	Amber
Housing Material	ABS
Housing Color	Black
Mounting Type	Low Profile Mount
Minimum Operating Temperature	-40 °C / -40 °F
Maximum Operating Temperature	65 °C / 149 °F
Product Weight	0.47 lbs / 0.21 kgs
Shipping Weight	0.79 lbs / 0.36 kgs

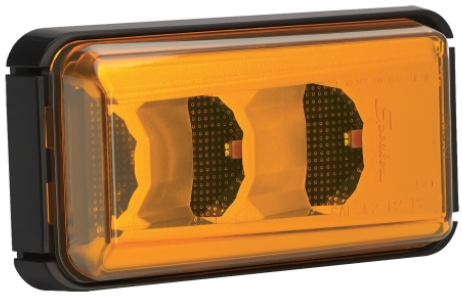

PRODUCT DIMENSIONS

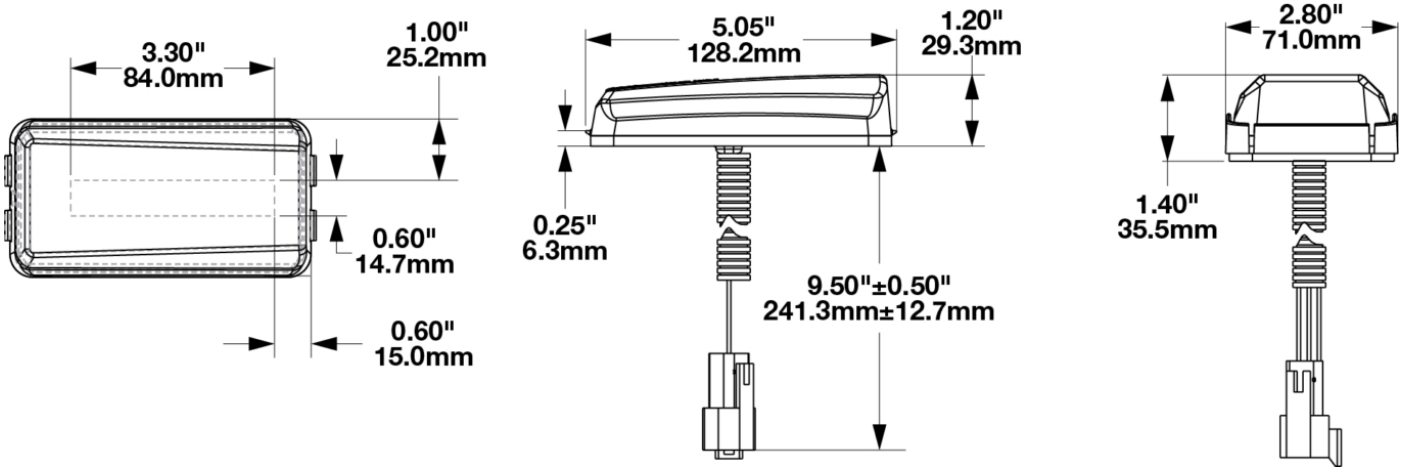

© 2026 J.W. Speaker Corporation • Germantown, WI U.S.A.
www.jwspeaker.com • speaker@jwspeaker.com • 262.251.6660

J.W. SPEAKER® Engineered. Lighting. Solutions.

PART NUMBER 0344461

LED Side Turn Signal & Marker Lights - Model 157

ELECTRICAL SPECIFICATIONS

Input Voltage	12-24V DC
Red Wire	Turn
Yellow Wire	Side
Black Wire	Negative
Current Draw	0.41A @ 12V DC 0.2A @ 24V DC

REGULATORY STANDARDS COMPLIANCE



Buy America Standards
ECE Reg 6
ECE Reg 91
Eco Friendly
FMVSS 108 s7.4 (Table X)
IEC IP67
SAE J2042
SAE J592
SAE J914

PHOTOMETRIC SPECIFICATIONS

Beam Pattern(s)	Signalization - Turn (Front) Signalization - Turn (Rear)

© 2026 J.W. Speaker Corporation • Germantown, WI U.S.A.
www.jwspeaker.com • speaker@jwspeaker.com • 262.251.6660

J.W. SPEAKER® Engineered. Lighting. Solutions.

PART NUMBER 0344461

LED Side Turn Signal & Marker Lights - Model 157

APPLICATIONS



PRODUCT WARNINGS

For California residents:
⚠ **WARNING:** Cancer and reproductive harm - www.P65Warnings.ca.gov.
⚠ **AVERTISSEMENT:** Cancer et effet nocif sur la reproduction - www.P65Warnings.ca.gov.

RELATED PRODUCTS



Part Number 0344301
12-24V ECE/SAE LED Clear Side Turn Signal with Mount



Part Number 0344311
12-24V ECE/SAE LED Amber Side Turn Signal with Mount

© 2026 J.W. Speaker Corporation • Germantown, WI U.S.A.
www.jwspeaker.com • speaker@jwspeaker.com • 262.251.6660

J.W. SPEAKER® Engineered. Lighting. Solutions.