PART NUMBER 0552991

LED Safety Light - Model 4415

PRODUCT INFORMATION

Description	12-110V LED Blue Warning Light
Height	110.00 mm / 4.33 in
Width	85.20 mm / 3.35 in
Depth	56.90 mm / 2.24 in
Shape	Round
Outer Lens Material	Polycarbonate
Outer Lens Color	Clear
Housing Material	Die-Cast Aluminum
Housing Color	Black
Mounting Hardware Description	(x1) M8-20 x 1.25 Mounting Bolt Black ZP
Mounting Type	Pedestal
Mating Connector	Packard Delphi 12059183
Product Weight	1.40 lbs / 0.64 kgs
Shipping Weight	1.10 lbs / 0.5 kgs



PRODUCT DIMENSIONS

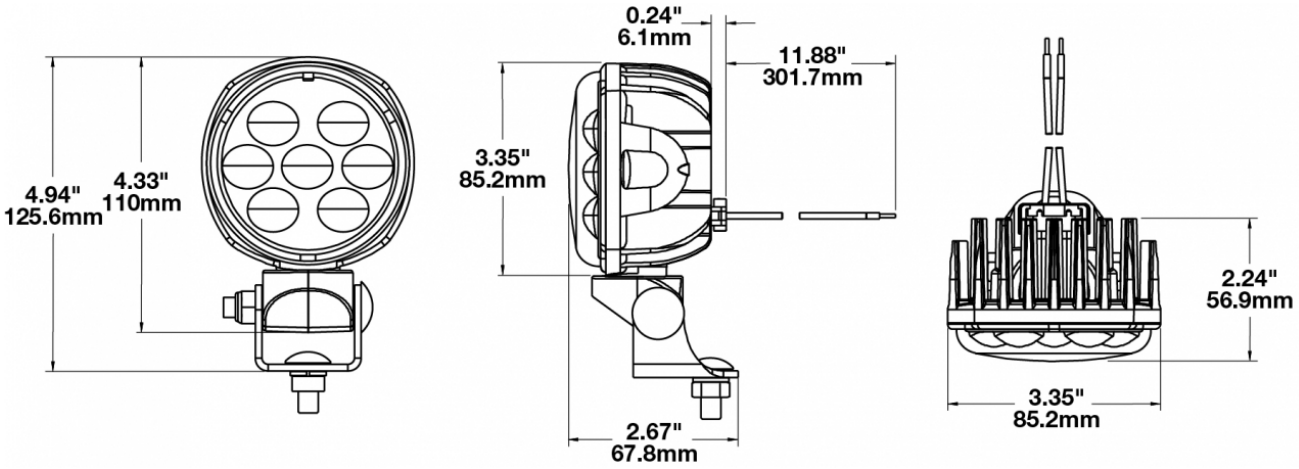

Print date: 2026-11-25
© 2026 J.W. Speaker Corporation • Germantown, WI U.S.A.
www.jwspeaker.com • speaker@jwspeaker.com • 262.251.6660

J.W. SPEAKER
Engineered. Lighting. Solutions.

PART NUMBER 0552991

LED Safety Light - Model 4415

ELECTRICAL SPECIFICATIONS

Input Voltage	12-110V DC
Red Wire	Power
Black Wire	Ground
Current Draw	1.50A @ 12V DC 1.05A @ 24V DC 0.51A @ 48V DC 0.40A @ 60V DC 0.25A @ 110V DC

REGULATORY STANDARDS COMPLIANCE



Buy America Standards
IEC IP67

Eco Friendly
UL Recognized

PHOTOMETRIC SPECIFICATIONS

Effective Lumen Output	258
Candela Output	10,268
Beam Pattern(s)	Warning - Keep Out Zone

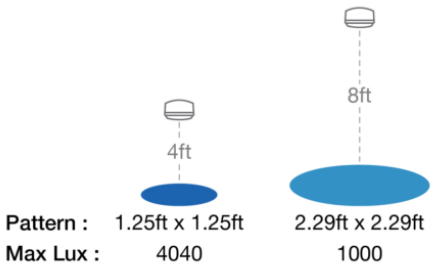

Print date: 2026-11-25

© 2026 J.W. Speaker Corporation • Germantown, WI U.S.A.

www.jwspeaker.com • speaker@jwspeaker.com • 262.251.6660

J.W. SPEAKER® Engineered. Lighting. Solutions.

LED Safety Light - Model 4415

APPLICATIONS

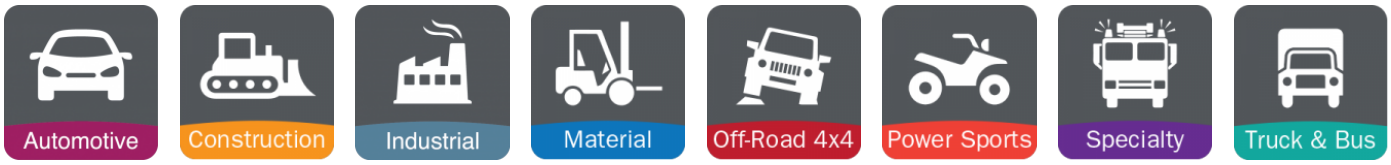

PRODUCT WARNINGS

For California residents:
⚠ **WARNING:** Cancer and reproductive harm - www.P65Warnings.ca.gov.
⚠ **AVERTISSEMENT:** Cancer et effet nocif sur la reproduction - www.P65Warnings.ca.gov.

RELATED PRODUCTS



Part Number 0552981
12-110V LED Red Warning Light

© 2026 J.W. Speaker Corporation • Germantown, WI U.S.A.
www.jwspeaker.com • speaker@jwspeaker.com • 262.251.6660

J.W. SPEAKER® Engineered. Lighting. Solutions.