# Motorcycle LED Headlights - Model 8790

## PRODUCT INFORMATION

| | |
|---|---|
| **Description** | 12V DOT/ECE LED High & Low Beam Headlight with Chrome Inner Bezel |
| **Height** | 177.20 mm / 6.98 in |
| **Width** | 177.20 mm / 6.98 in |
| **Depth** | 93.68 mm / 3.69 in |
| **Shape** | Round |
| **Outer Lens Material** | Polycarbonate |
| **Outer Lens Color** | Clear |
| **Housing Material** | Die-Cast Aluminum |
| **Bezel Color** | Chrome |
| **Retrofits** | Bucket 7" Round Headlights (PAR56) |
| **Minimum Operating Temperature** | -40 °C / -40 °F |
| **Maximum Operating Temperature** | 65 °C / 149 °F |
| **Connector or Wiring** | H4 |
| **Mating Connector** | H4 AMP#172615-2 |

## PRODUCT DIMENSIONS

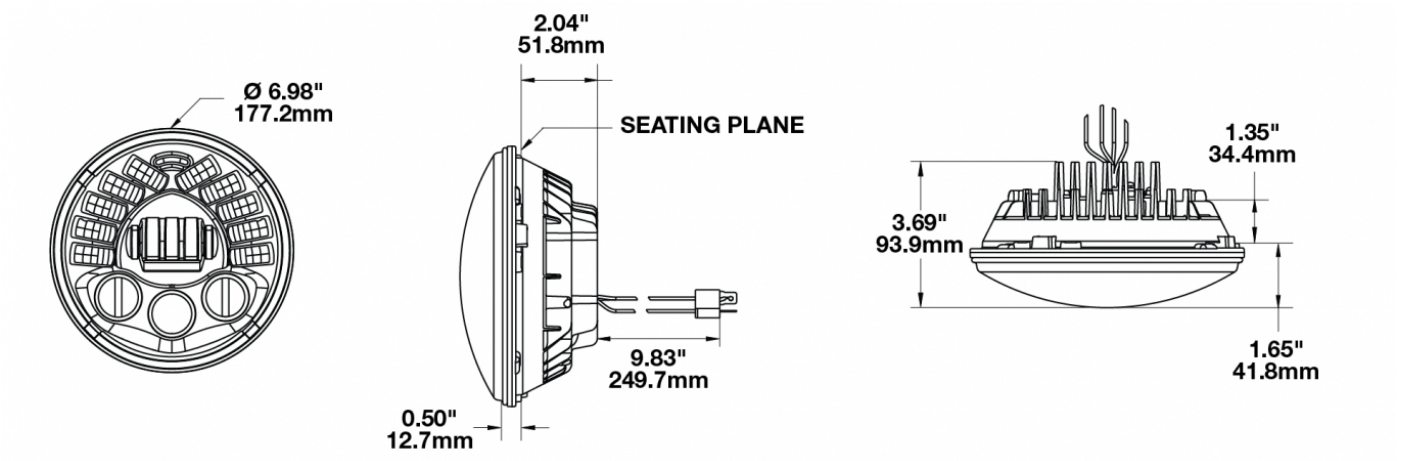


**Print date: 2017-03-31**

© 2017 J.W. Speaker Corporation • Germantown, WI U.S.A.

www.jwspeaker.com • speaker@jwspeaker.com • 262.251.6660

J.W. SPEAKER®
Engineered. Lighting. Solutions.

# Motorcycle LED Headlights - Model 8790

## PHOTOMETRIC SPECIFICATIONS

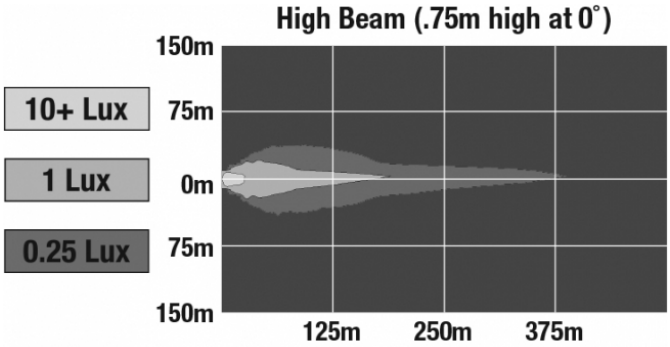


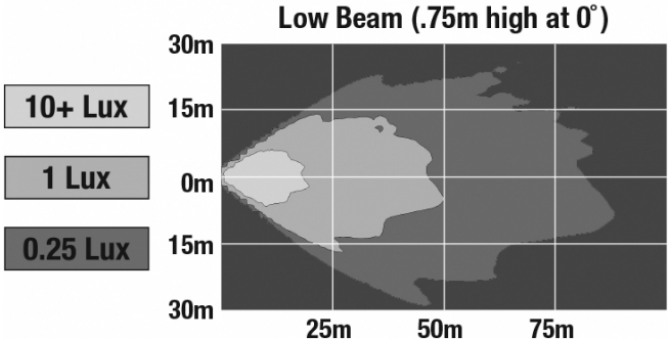


## ACCESSORIES

**Part Number 3156351**
Mounting Ring Kit for 7" Round (PAR56) Headlights


© 2017 J.W. Speaker Corporation • Germantown, WI U.S.A.
www.jwspeaker.com • speaker@jwspeaker.com • 262.251.6660

J.W. SPEAKER®
Engineered. Lighting. Solutions.

# Motorcycle LED Headlights - Model 8790

## RELATED PRODUCTS

**Part Number 0553421**
12V DOT/ECE LED High & Low Beam Headlight with Black Inner Bezel

**Print date: 2017-03-31**

© 2017 J.W. Speaker Corporation • Germantown, WI U.S.A.

www.jwspeaker.com • speaker@jwspeaker.com • 262.251.6660

J.W. SPEAKER®
Engineered. Lighting. Solutions.