PART NUMBER 0647001

LED Signal Light - Model 9049-2M

PRODUCT INFORMATION

Description	12V LED 15"4 Color Rail Yard Signal Light
Height	103.00 mm / 4.06 in
Width	400.00 mm / 15.75 in
Depth	77.00 mm / 3.03 in
Shape	Rectangular
Outer Lens Material	Polycarbonate
Outer Lens Color	White
Housing Material	Aluminum
Housing Color	Black
Minimum Operating Temperature	-40 °C / -40 °F
Maximum Operating Temperature	65 °C / 149 °F
Product Weight	4.75 lbs / 2.15 kgs
Shipping Weight	5.50 lbs / 2.49 kgs



PRODUCT DIMENSIONS

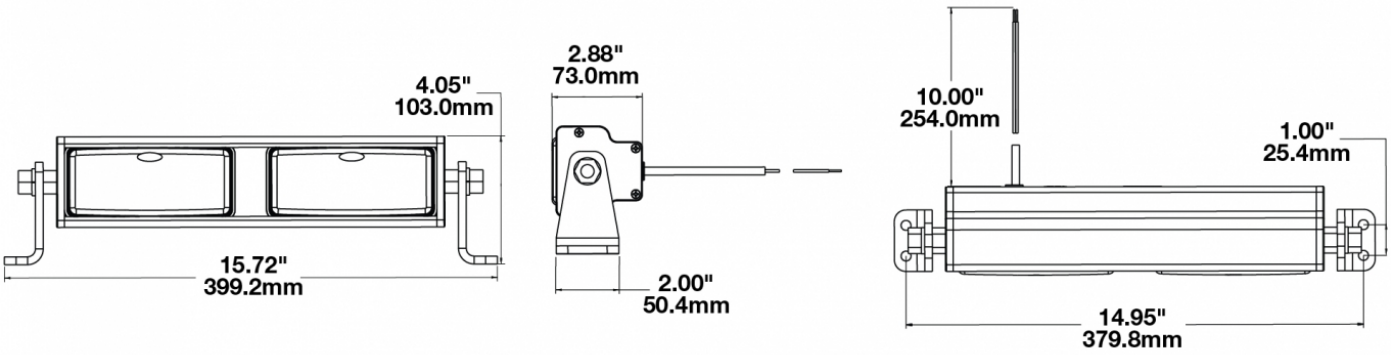

© 2026 J.W. Speaker Corporation • Germantown, WI U.S.A.
www.jwspeaker.com • speaker@jwspeaker.com • 262.251.6660

J.W. SPEAKER
Engineered. Lighting. Solutions.

PART NUMBER 0647001

LED Signal Light - Model 9049-2M

ELECTRICAL SPECIFICATIONS

Input Voltage	12V DC
Operating Voltage	9-16V DC
Transient Spike Protection	330V Peak @ 1 HZ-100 Pulses
Brown Wire	Green Pin 1
White Wire	Amber Pin 2
Blue Wire	Blue Pin 3
Black Wire	Ground Pin 4
Gray Wire	Red Pin 5
Current Draw	0.70A @ 12V DC (Red) 0.80A @ 12V DC (Amber) 0.875A @ 12V DC (Green) 0.925A @ 12V DC (Blue)

PHOTOMETRIC SPECIFICATIONS

Beam Pattern(s)	Warning - Keep Out Zone

APPLICATIONS



PRODUCT WARNINGS

For California residents:
⚠ **WARNING:** Cancer and reproductive harm - www.P65Warnings.ca.gov.
⚠ **AVERTISSEMENT:** Cancer et effet nocif sur la reproduction - www.P65Warnings.ca.gov.

© 2026 J.W. Speaker Corporation • Germantown, WI U.S.A.
www.jwspeaker.com • speaker@jwspeaker.com • 262.251.6660

J.W. SPEAKER® Engineered. Lighting. Solutions.