PART NUMBER 0341281

LED License Plate Light - Model 151

PRODUCT INFORMATION

Description	12-24V DOT/ECE LED License Plate Light
Height	37.34 mm / 1.47 in
Width	76.20 mm / 3 in
Depth	37.59 mm / 1.48 in
Shape	Rectangular
Outer Lens Material	Acrylic
Outer Lens Color	Clear
Housing Material	ABS
Housing Color	Black
Mounting Type	Low Profile Mount
Minimum Operating Temperature	-40 °C / -40 °F
Maximum Operating Temperature	65 °C / 149 °F
Connector or Wiring	118" 20 AWG Jacketed Cable
Product Weight	0.16 lbs / 0.07 kgs
Shipping Weight	1.10 lbs / 0.5 kgs



PRODUCT DIMENSIONS

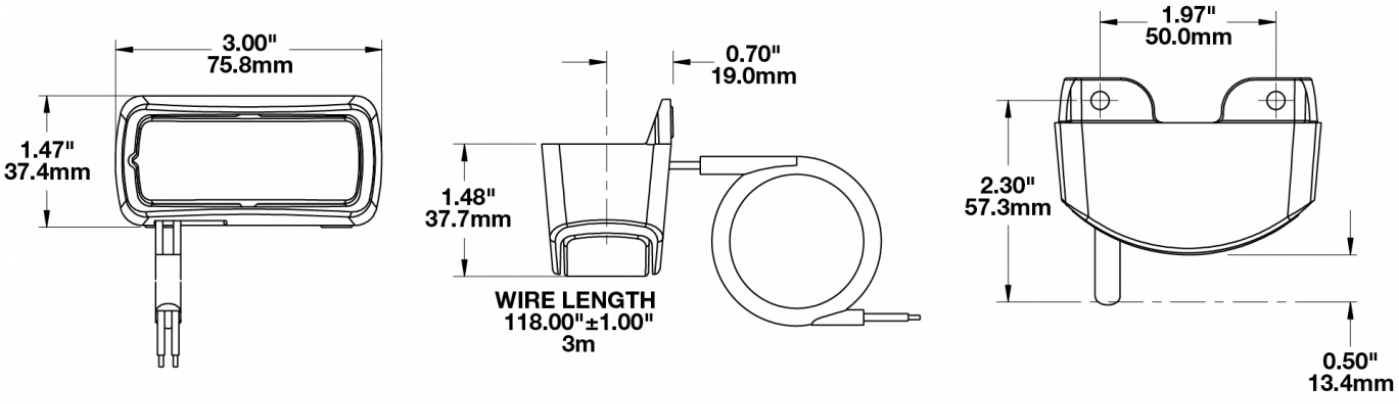

© 2026 J.W. Speaker Corporation • Germantown, WI U.S.A.
www.jwspeaker.com • speaker@jwspeaker.com • 262.251.6660

J.W. SPEAKER
Engineered. Lighting. Solutions.

PART NUMBER 0341281

LED License Plate Light - Model 151

ELECTRICAL SPECIFICATIONS

Input Voltage	12-24V DC
Red Wire	Positive
Black Wire	Negative
Current Draw	0.070 (Max)A @ 12V DC

REGULATORY STANDARDS COMPLIANCE



Buy America Standards
ECE Reg 50
ECE Reg 4
Eco Friendly

PHOTOMETRIC SPECIFICATIONS

Nominal LED Color Temperature	5000 K
Beam Pattern(s)	Signalization - License Plate Illuminator

APPLICATIONS



PRODUCT WARNINGS

For California residents:
⚠ **WARNING:** Cancer and reproductive harm - www.P65Warnings.ca.gov.
⚠ **AVERTISSEMENT:** Cancer et effet nocif sur la reproduction - www.P65Warnings.ca.gov.

Print date: 2026-11-24
© 2026 J.W. Speaker Corporation • Germantown, WI U.S.A.
www.jwspeaker.com • speaker@jwspeaker.com • 262.251.6660

J.W. SPEAKER® Engineered. Lighting. Solutions.