PART NUMBER 0346503

LED Jeep Turn Signals - Model 239 J2 Series

PRODUCT INFORMATION

Description	12V DOT/ECE LED Round Turn Signals with Smoked Lens - 2 Light Kit
Height	89.00 mm / 3.5 in
Width	89.00 mm / 3.5 in
Depth	56.00 mm / 2.2 in
Shape	Round
Outer Lens Material	Acrylic
Outer Lens Color	Smoked
Housing Material	Aluminum
Housing Color	Black
Mounting Hardware Description	(x1) JK Mounting Bracket w/ SS bolt
Retrofits	Factory Jeep JK Front Turn Signals
Minimum Operating Temperature	-40 °C / -40 °F
Maximum Operating Temperature	60 °C / 140 °F
Connector or Wiring	Leads with Connector
Mating Connector	Delphi 13590270
Product Weight	0.90 lbs / 0.41 kgs
Shipping Weight	1.36 lbs / 0.62 kgs



239 J2 SERIES

Print date: 2026-11-24

© 2026 J.W. Speaker Corporation • Germantown, WI U.S.A.

www.jwspeaker.com • speaker@jwspeaker.com • 262.251.6660

J.W. SPEAKER® Engineered. Lighting. Solutions.

PART NUMBER 0346503

LED Jeep Turn Signals - Model 239 J2 Series

PRODUCT DIMENSIONS

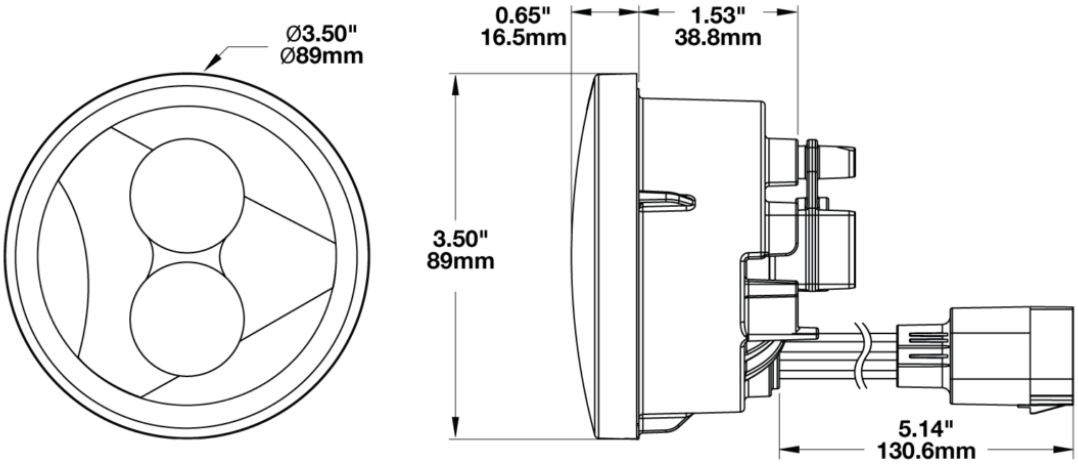

ELECTRICAL SPECIFICATIONS

Input Voltage	12V DC
Operating Voltage	9-16V DC
Current Draw	0.12A @ 12V DC (Front Position) 2.10A @ 12V DC (Turn)

REGULATORY STANDARDS COMPLIANCE



Buy America Standards	ECE Reg 6
Eco Friendly	FMVSS 108 s7.1 (Table VI)
IEC IP67	SAE J588

Print date: 2026-11-24

© 2026 J.W. Speaker Corporation • Germantown, WI U.S.A.

www.jwspeaker.com • speaker@jwspeaker.com • 262.251.6660

J.W. SPEAKER® Engineered. Lighting. Solutions.

LED Jeep Turn Signals - Model 239 J2 Series

PHOTOMETRIC SPECIFICATIONS

Beam Pattern(s)	Signalization - Front Position Signalization - Turn (Front)

APPLICATIONS



PRODUCT WARNINGS

For California residents:
⚠ **WARNING:** Cancer and reproductive harm - www.P65Warnings.ca.gov.
⚠ **AVERTISSEMENT:** Cancer et effet nocif sur la reproduction - www.P65Warnings.ca.gov.

RELATED PRODUCTS



Part Number 0346483
12V DOT/ECE LED Round Turn Signals with Amber Lens - 2 Light Kit



Part Number 0346493
12V DOT/ECE LED Round Turn Signals with Clear Lens - 2 Light Kit

© 2026 J.W. Speaker Corporation • Germantown, WI U.S.A.
www.jwspeaker.com • speaker@jwspeaker.com • 262.251.6660

J.W. SPEAKER® Engineered. Lighting. Solutions.