PART NUMBER 0442541

LED Interior Light - Model 408

PRODUCT INFORMATION

Description	12-24V LED Engine Compartment Light without Mounting Bracket
Height	83.82 mm / 3.3 in
Width	70.10 mm / 2.76 in
Depth	91.44 mm / 3.6 in
Shape	Round
Outer Lens Material	Glass
Outer Lens Color	Clear
Housing Material	Die-Cast Aluminum
Housing Color	Black
Mounting Type	Universal Mount
Minimum Operating Temperature	-40 °C / -40 °F
Maximum Operating Temperature	65 °C / 149 °F
Connector or Wiring	12" Bare Leads
Product Weight	0.37 lbs / 0.17 kgs
Shipping Weight	0.49 lbs / 0.22 kgs



PRODUCT DIMENSIONS

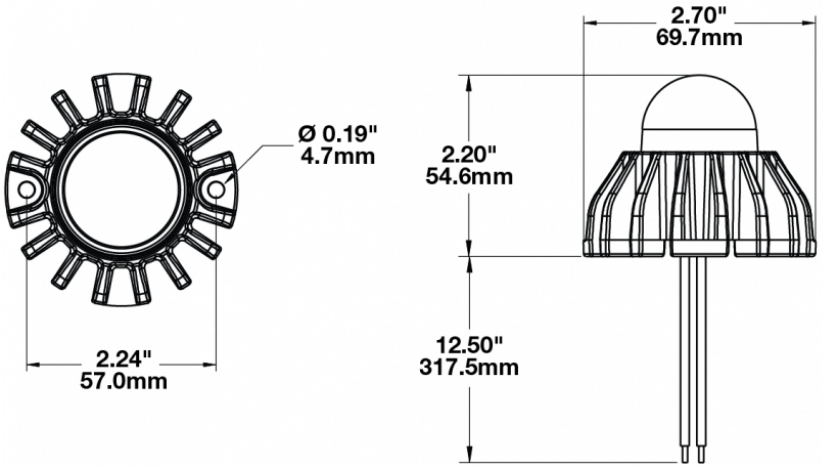

© 2026 J.W. Speaker Corporation • Germantown, WI U.S.A.
www.jwspeaker.com • speaker@jwspeaker.com • 262.251.6660

J.W. SPEAKER
Engineered. Lighting. Solutions.

PART NUMBER 0442541

LED Interior Light - Model 408

ELECTRICAL SPECIFICATIONS

Input Voltage	12-24V DC
Red Wire	Positive
Black Wire	Negative
Current Draw	0.4A @ 12V DC 0.21A @ 24V DC

REGULATORY STANDARDS COMPLIANCE



Buy America Standards

IEC IP67

Eco Friendly

SAE J575

PHOTOMETRIC SPECIFICATIONS

Nominal LED Color Temperature	5000 K
Beam Pattern(s)	Interior - Compartment Light

APPLICATIONS

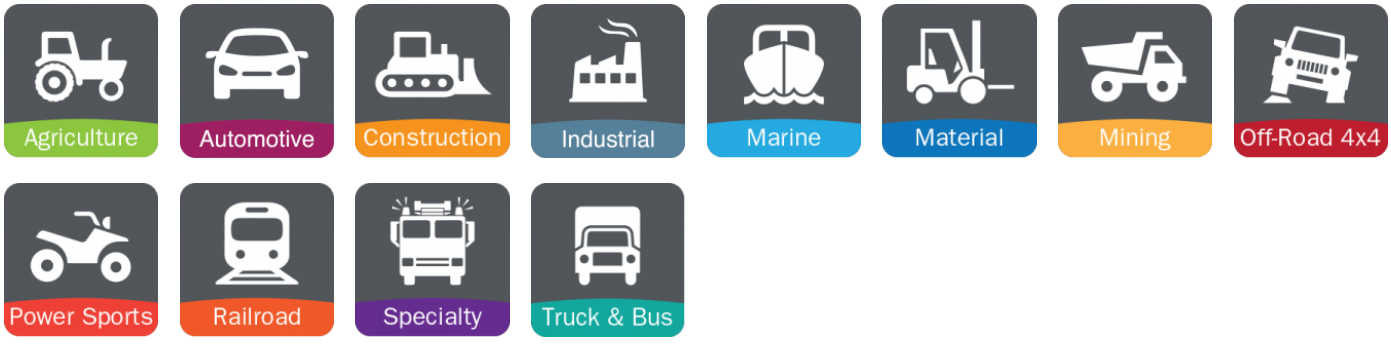

Print date: 2026-11-24

© 2026 J.W. Speaker Corporation • Germantown, WI U.S.A.

www.jwspeaker.com • speaker@jwspeaker.com • 262.251.6660

J.W. SPEAKER®
Engineered. Lighting. Solutions.

PART NUMBER 0442541

LED Interior Light - Model 408

PRODUCT WARNINGS

For California residents:
⚠ **WARNING:** Cancer and reproductive harm - www.P65Warnings.ca.gov.
⚠ **AVERTISSEMENT:** Cancer et effet nocif sur la reproduction - www.P65Warnings.ca.gov.

Print date: 2026-11-24
© 2026 J.W. Speaker Corporation • Germantown, WI U.S.A.
www.jwspeaker.com • speaker@jwspeaker.com • 262.251.6660

J.W. SPEAKER® Engineered. Lighting. Solutions.