LED Headlights – Model 8700 EVO 3

PRODUCT INFORMATION

Description	12V LHT ECE LED High/Low Beam Heated Headlight - Chrome - 2 Light Kit
Height	176.50 mm / 6.95 in
Width	176.50 mm / 6.95 in
Depth	112.00 mm / 4.41 in
Shape	Round
Outer Lens Material	Polycarbonate
Outer Lens Color	Clear
Housing Material	Aluminum
Housing Color	Black
Bezel Color	Chrome
Retrofits	7" Round Headlights or 2D1 PAR56
Minimum Operating Temperature	-40 °C / -40 °F
Maximum Operating Temperature	65 °C / 149 °F
Connector or Wiring	H4 / (3X) 11.97" Flying Leads
Product Weight	4.96 lbs / 2.25 kgs
Shipping Weight	6.58 lbs / 2.98 kgs

HEATED RIGHT HAND HEADLIGHT HEATED LEFT HAND HEADLIGHT

PRODUCT DIMENSIONS

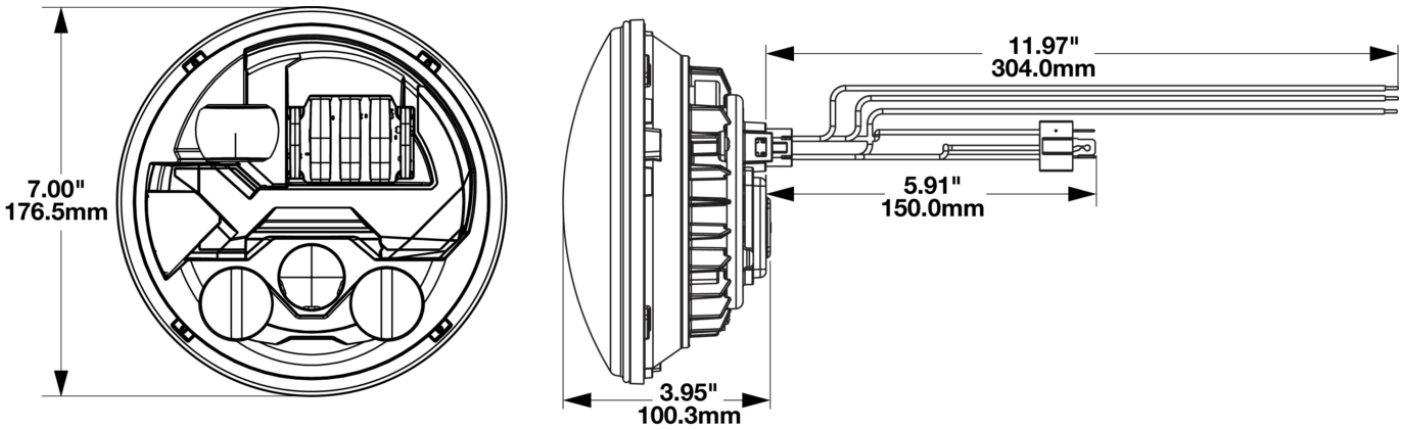

© 2024 J.W. Speaker Corporation • Germantown, WI U.S.A.
www.jwspeaker.com • speaker@jwspeaker.com • 262.251.6660

LED Headlights – Model 8700 EVO 3

ELECTRICAL SPECIFICATIONS

Input Voltage	12V DC
Operating Voltage	9-16V DC
Transient Spike Protection	150V Peak @ 1 HZ-100 Pulses
Black Wire	Ground
Yellow Wire	Low Beam
White Wire	High Beam
Brown Wire	Front turn
Red Wire	Position
Blue Wire	DRL
Current Draw	2.33A @ 12V DC (Low Beam) 3.25A @ 12V DC (High Beam) 3.00A @ 12V DC (Front Turn) 0.45A @ 12V DC (Position) 3.00A @ 12V DC (DRL) 5.70A @ 12V DC (Low Beam w/Heat) 6.40A @ 12V DC (High Beam w/Heat) 5.50A @ 12V DC (Front Turn w/Heat) 2.70A @ 12V DC (Position w/Heat) 5.50A @ 12V DC (DRL w/Heat)

REGULATORY STANDARDS COMPLIANCE

Buy America Standards	ECE Reg 112
ECE Reg 7	ECE Reg 87
Eco Friendly	IEC IP69K

Print date: 2024-04-25

© 2024 J.W. Speaker Corporation • Germantown, WI U.S.A.

www.jwspeaker.com • speaker@jwspeaker.com • 262.251.6660

J.W. SPEAKER®
Engineered. Lighting. Solutions.

LED Headlights – Model 8700 EVO 3

PHOTOMETRIC SPECIFICATIONS

Raw Lumen Output	3,600 (High Beam); 3,020 (Low Beam)
Effective Lumen Output	1,320 (High Beam); 1,201 (Low Beam)
Candela Output	68,800 (High Beam) 24,800 (Low Beam)
Nominal LED Color Temperature	5000 K
Beam Pattern(s)	Forward Lighting - Daytime Running Light Forward Lighting - High Beam (ECE) Forward Lighting - Low Beam (ECE Left Hand) Signalization - Front Position Signalization - Turn (Front)

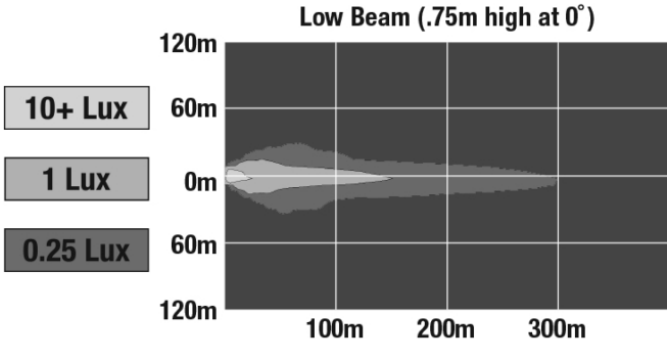

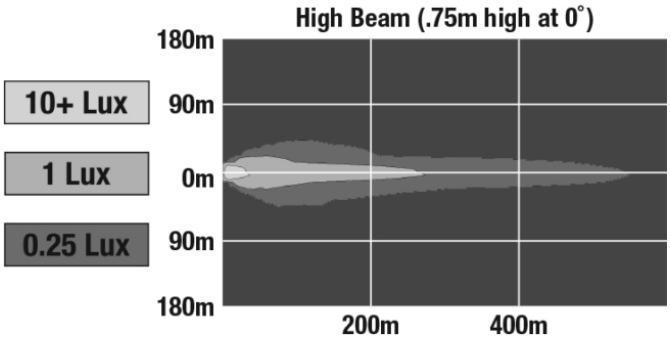

APPLICATIONS

PRODUCT WARNINGS

For California residents:
⚠ **WARNING:** Cancer and reproductive harm - www.P65Warnings.ca.gov.
⚠ **AVERTISSEMENT:** Cancer et effet nocif sur la reproduction - www.P65Warnings.ca.gov.

Print date: 2024-04-25
© 2024 J.W. Speaker Corporation • Germantown, WI U.S.A.
www.jwspeaker.com • speaker@jwspeaker.com • 262.251.6660

J.W. SPEAKER®
Engineered. Lighting. Solutions.

LED Headlights – Model 8700 EVO 3

RELATED PRODUCTS

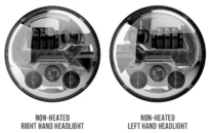

Part Number 0558123
12V RHT DOT/ECE LED High/Low Beam Headlight - Chrome - 2 Light Kit

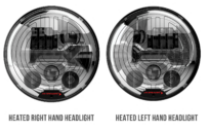

Part Number 0558133
12V RHT DOT/ECE LED High/Low Beam Heated Headlight - Chrome - 2 Light Kit

Part Number 0558161
12V RHT DOT/ECE LED High/Low Beam Headlight - Chrome - Single RH Light

Part Number 0558171
12V RHT DOT/ECE LED High/Low Beam Headlight - Chrome - Single LH Light

Part Number 0558201
12V RHT DOT/ECE High and Low Beam Heated - RH Light

Part Number 0558211
12V RHT DOT/ECE LED High/Low Beam Heated Headlight - Chrome - Single LH Light

Part Number 0558243
12V LHT ECE LED High/Low Beam Headlight - Chrome - 2 Light Kit

Part Number 0558261
12V LHT ECE LED High/Low Beam Headlight - Chrome - Single RH Light

© 2024 J.W. Speaker Corporation • Germantown, WI U.S.A.
www.jwspeaker.com • speaker@jwspeaker.com • 262.251.6660

J.W. SPEAKER®
Engineered. Lighting. Solutions.