PART NUMBER 0556961

LED Headlights - Model 8700 EVO 2 PRO

PRODUCT INFORMATION

Description	12-24V ECE LHT High & Low Beam Headlight with DRL - Black
Height	176.53 mm / 6.95 in
Width	176.53 mm / 6.95 in
Depth	99.82 mm / 3.93 in
Shape	Round
Outer Lens Material	Polycarbonate
Outer Lens Color	Clear
Housing Material	Aluminum
Housing Color	Gray
Bezel Color	Black
Retrofits	2D1 "PAR56" or 7" Round Headlights
Minimum Operating Temperature	-40 °C / -40 °F
Maximum Operating Temperature	65 °C / 149 °F
Connector or Wiring	H4
Mating Connector	H4 AMP#172615-2
Product Weight	2.31 lbs / 1.05 kgs
Shipping Weight	3.35 lbs / 1.52 kgs

PRODUCT DIMENSIONS

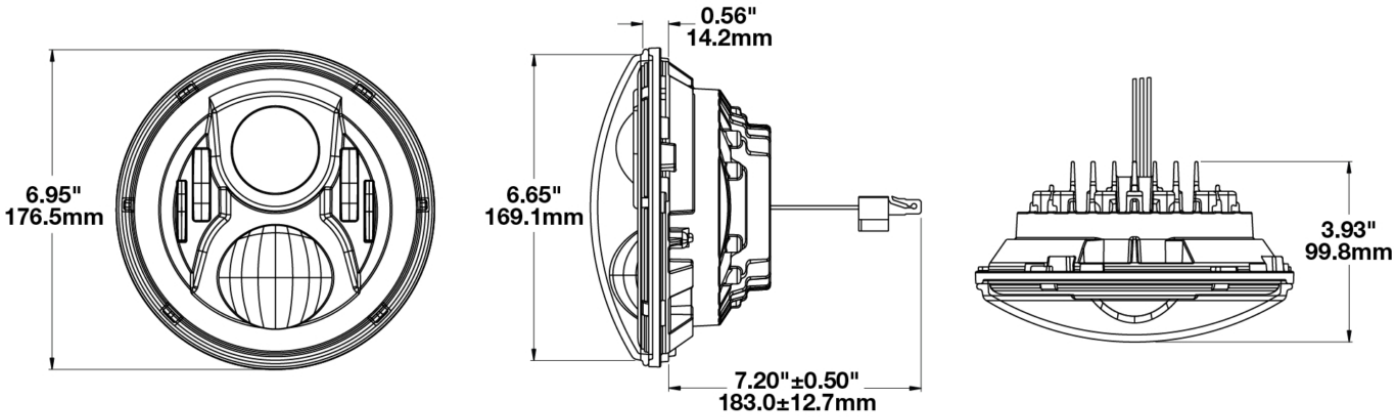

Print date: 2026-04-04

© 2026 J.W. Speaker Corporation • Germantown, WI U.S.A.

www.jwspeaker.com • speaker@jwspeaker.com • 262.251.6660

LED Headlights - Model 8700 EVO 2 PRO

ELECTRICAL SPECIFICATIONS

Input Voltage	12-24V DC
Operating Voltage	9-32V DC
Transient Spike Protection	150V Peak @ 1 HZ-100 Pulses
Black Wire	Ground
Yellow Wire	Low Beam
White Wire	High Beam
Red Wire	Front Position
Blue Wire	DRL
Current Draw	3.60A @ 12V DC (High Beam) 2.00A @ 12V DC (Low Beam) 1.80A @ 24V DC (High Beam) 1.10A @ 24V DC (Low Beam) 1.60A @ 12V DC (DRL) 0.80A @ 24V DC (DRL) 0.16A @ 12V DC (Front Position) 0.10A @ 24V DC (Front Position)

REGULATORY STANDARDS COMPLIANCE

Buy America Standards
ECE Reg 112
ECE Reg 87
IEC IP67
ECE Reg 10
ECE Reg 7
Eco Friendly

© 2026 J.W. Speaker Corporation • Germantown, WI U.S.A.
www.jwspeaker.com • speaker@jwspeaker.com • 262.251.6660

J.W. SPEAKER®
Engineered. Lighting. Solutions.

LED Headlights - Model 8700 EVO 2 PRO

PHOTOMETRIC SPECIFICATIONS

Raw Lumen Output	4,170 (High Beam); 2,340 (Low Beam)
Effective Lumen Output	1,340 (High Beam); 694 (Low Beam)
Candela Output	84,700 (High Beam); 30,600 (Low Beam)
Nominal LED Color Temperature	5000 K
Beam Pattern(s)	Forward Lighting - Daytime Running Light Forward Lighting - High Beam (ECE) Forward Lighting - Low Beam (ECE Left Hand) Signalization - Front Position

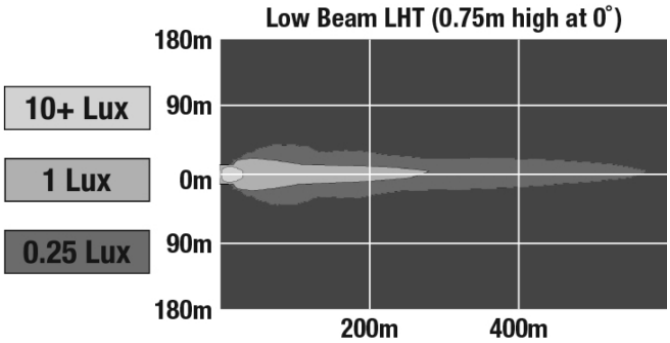

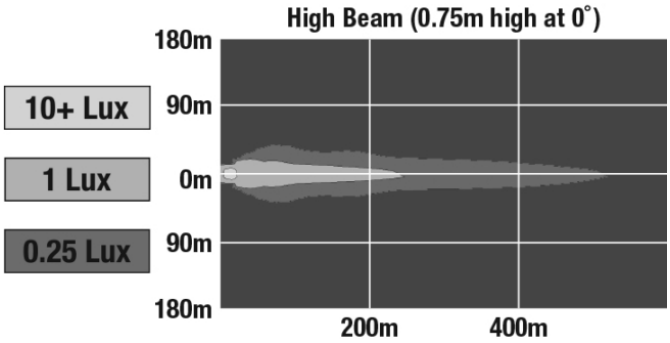

APPLICATIONS

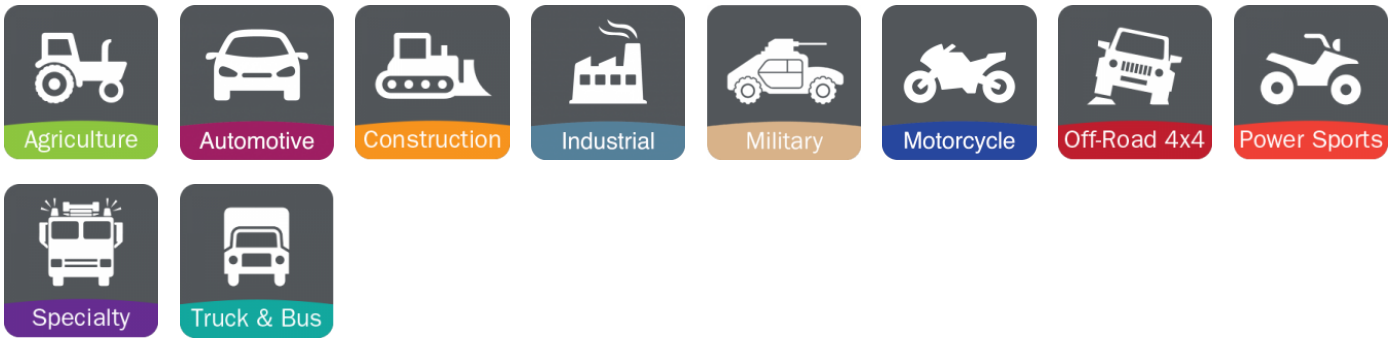

PRODUCT WARNINGS

For California residents:
⚠ **WARNING:** Cancer and reproductive harm - www.P65Warnings.ca.gov.
⚠ **AVERTISSEMENT:** Cancer et effet nocif sur la reproduction - www.P65Warnings.ca.gov.

Print date: 2026-04-04
© 2026 J.W. Speaker Corporation • Germantown, WI U.S.A.
www.jwspeaker.com • speaker@jwspeaker.com • 262.251.6660

J.W. SPEAKER®
Engineered. Lighting. Solutions.

LED Headlights - Model 8700 EVO 2 PRO

ACCESSORIES

Part Number 8201111
Black Polycarbonate Bucket for 7" Round (PAR56) Headlight

© 2026 J.W. Speaker Corporation • Germantown, WI U.S.A.
www.jwspeaker.com • speaker@jwspeaker.com • 262.251.6660