PART NUMBER 0552031

LED ATV and UTV Headlights - Model 8415 Evolution

PRODUCT INFORMATION

Description	12-24V SAE/ECE LED High/Low Beam Light with Polycarbonate Housing & Adjustable Mount - UL Version
Height	119.63 mm / 4.71 in
Width	111.25 mm / 4.38 in
Depth	72.90 mm / 2.87 in
Shape	Round
Outer Lens Material	Polycarbonate
Outer Lens Color	Clear
Housing Material	Polycarbonate
Housing Color	Black
Mounting Type	Adjustable Mount
Retrofits	Large Vehicles
Minimum Operating Temperature	-40 °C / -40 °F
Maximum Operating Temperature	65 °C / 149 °F
Mating Connector	PE 12110293
Product Weight	0.51 lbs / 0.23 kgs
Shipping Weight	1.10 lbs / 0.5 kgs
Additional Information	Lamp meets SAE J1623, SAE J2258, ASABE S608, ECE Reg 113 Class C. UL Recognized. Adjustable Mount is needed for larger vehicles in order to modify pattern as needed.



Print date: 2026-11-23

© 2026 J.W. Speaker Corporation • Germantown, WI U.S.A.

www.jwspeaker.com • speaker@jwspeaker.com • 262.251.6660

J.W. SPEAKER® Engineered. Lighting. Solutions.

PART NUMBER 0552031

LED ATV and UTV Headlights - Model 8415 Evolution

PRODUCT DIMENSIONS

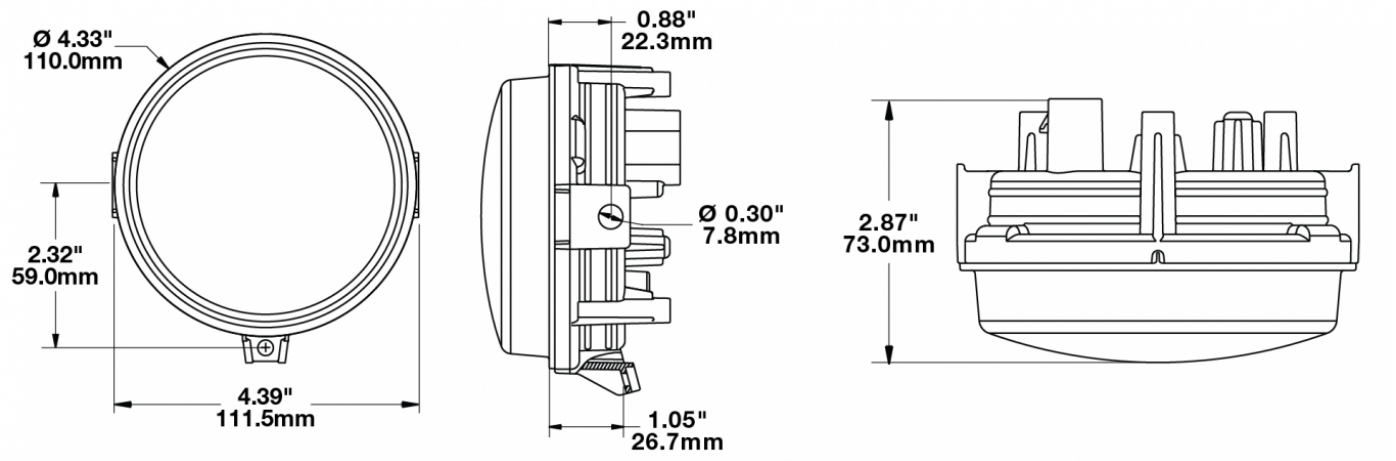

ELECTRICAL SPECIFICATIONS

Input Voltage	12-24V DC
Operating Voltage	10-30V DC
Current Draw	1.14A @ 12V DC (High Beam) 0.41A @ 12V DC (Low Beam) 0.57A @ 24V DC (High Beam) 0.22A @ 24V DC (Low Beam)

REGULATORY STANDARDS COMPLIANCE

ASABE | USA | ECE | ECO | IP67 | SAE

ASABE S608	Buy America Standards
ECE Reg 113	Eco Friendly
IEC IP67	SAE J1623
SAE J2258	UL Recognized

Print date: 2026-11-23

© 2026 J.W. Speaker Corporation • Germantown, WI U.S.A.

www.jwspeaker.com • speaker@jwspeaker.com • 262.251.6660

J.W. SPEAKER® Engineered. Lighting. Solutions.

PART NUMBER 0552031

LED ATV and UTV Headlights - Model 8415 Evolution

PHOTOMETRIC SPECIFICATIONS

Raw Lumen Output	1,075 (High Beam); 430 (Low Beam)
Effective Lumen Output	720 (High Beam); 240 (Low Beam)
Nominal LED Color Temperature	5000 K
Beam Pattern(s)	Forward Lighting - High Beam (DOT/ECE) Forward Lighting - Low Beam (DOT) Forward Lighting - Low Beam (ECE Right Hand)

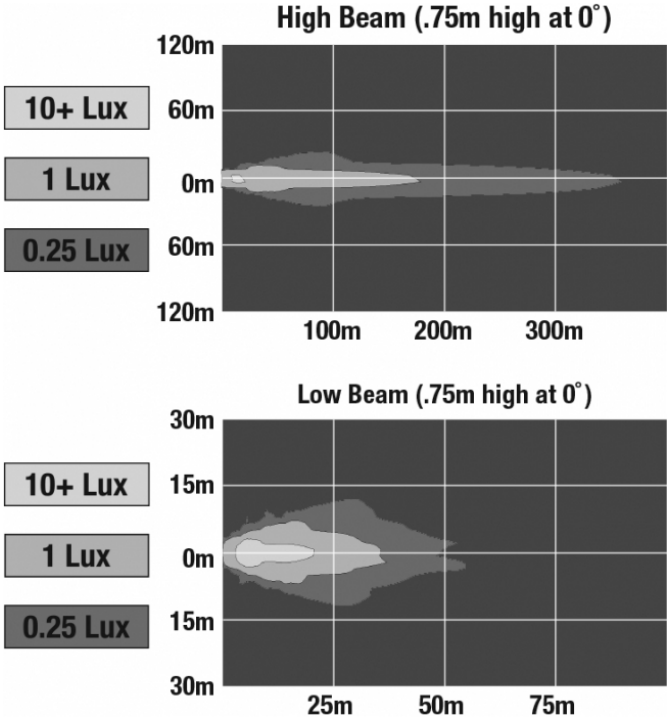

APPLICATIONS

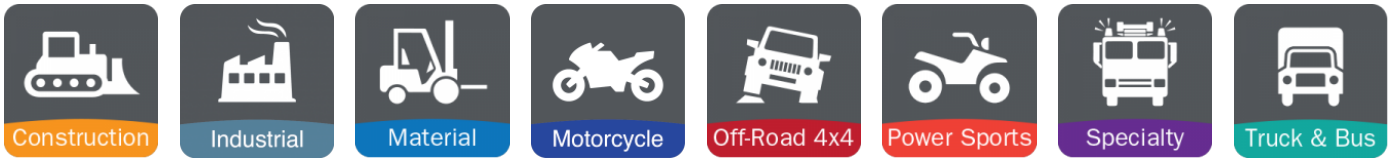

PRODUCT WARNINGS

For California residents:
⚠ **WARNING:** Cancer and reproductive harm - www.P65Warnings.ca.gov.
⚠ **AVERTISSEMENT:** Cancer et effet nocif sur la reproduction - www.P65Warnings.ca.gov.

Print date: 2026-11-23
© 2026 J.W. Speaker Corporation • Germantown, WI U.S.A.
www.jwspeaker.com • speaker@jwspeaker.com • 262.251.6660

J.W. SPEAKER® Engineered. Lighting. Solutions.

LED ATV and UTV Headlights - Model 8415 Evolution

RELATED PRODUCTS



Part Number 0551191
12-24V SAE/ECE LED High/Low Beam Light with Xenoy Housing & Adjustable Mount



Part Number 0551761
12-24V SAE/ECE LED High/Low Beam Light with Xenoy Housing & Fixed Panel Mount



Part Number 0556421
12-24V SAE LED Low Beam ATV Headlight with Fixed Panel Mount



Part Number 0556431
12-24V SAE LED Low Beam ATV Headlight with Adjustable Mount



Part Number 0558361
12-24V DOT LED Low Beam/Front Position Headlight w/ Built in Turn Signal & Adjustable Mount

© 2026 J.W. Speaker Corporation • Germantown, WI U.S.A.
www.jwspeaker.com • speaker@jwspeaker.com • 262.251.6660

J.W. SPEAKER® Engineered. Lighting. Solutions.