PART NUMBER 0561301

LED Headlight – Model 8633 Evolution

PRODUCT INFORMATION

Description	12/24V DOT/ECE LED RHT Heated Headlight w/ Turn Signal, DRL, & FP (WIRE ASSEMBLY IS SOLD SEPARATELY)
Height	172.50 mm / 6.79 in
Width	143.50 mm / 5.65 in
Depth	88.20 mm / 3.47 in
Shape	Round
Outer Lens Material	Polycarbonate
Outer Lens Color	Clear
Housing Material	Aluminum
Housing Color	Black
Bezel Color	N/A
Mounting Hardware Description	(x1) 0.375"-16 x 1.5" Single bolt
Mounting Type	Pedestal
Connector or Wiring	Integral Housing Connnector APTIV 12124107
Mating Connector	APTIV 12052848 , JWS 5747010
Product Weight	2.40 lbs / 1.09 kgs
Shipping Weight	3.30 lbs / 1.5 kgs



8633 EVOLUTION

Print date: 2026-11-25

© 2026 J.W. Speaker Corporation • Germantown, WI U.S.A.

www.jwspeaker.com • speaker@jwspeaker.com • 262.251.6660

J.W. SPEAKER® Engineered. Lighting. Solutions.

PART NUMBER 0561301

LED Headlight – Model 8633 Evolution

PRODUCT DIMENSIONS

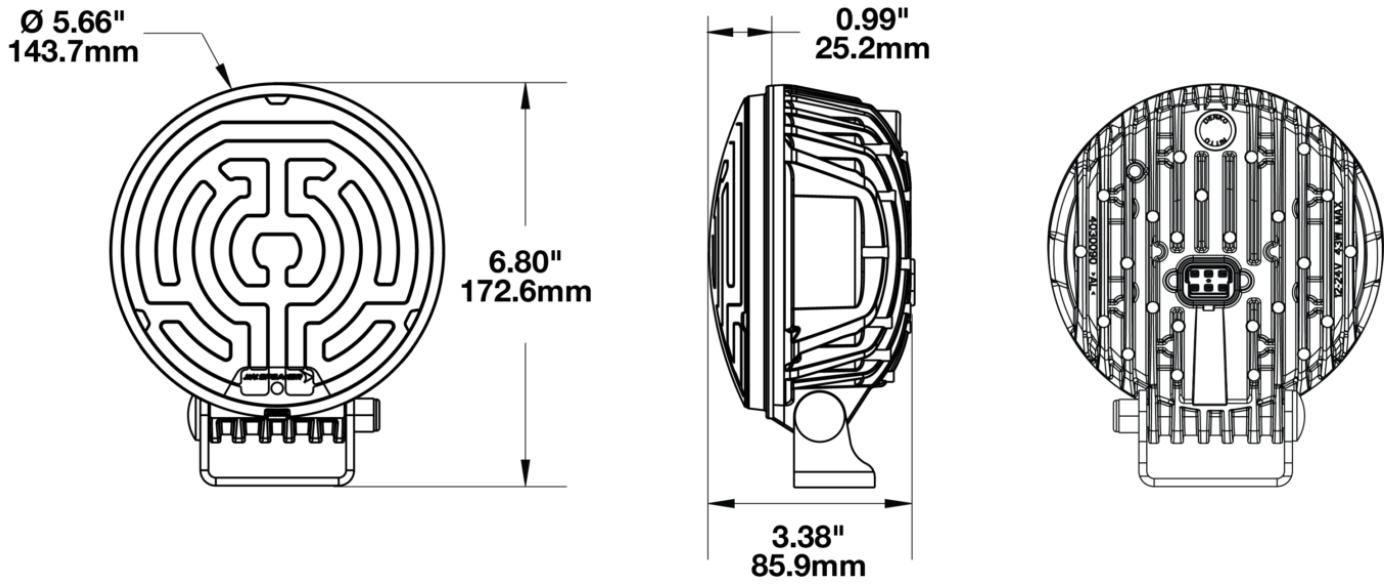

ELECTRICAL SPECIFICATIONS

Input Voltage	12/24V DC
Current Draw	4.0A @ 13.5V DC (High Beam w/heater) 3.5A @ 13.5V DC (Low Beam w/heater) 2.8A @ 13.5V DC (DRL w/heater) 2.4A @ 13.5V DC (Parking w/heater) 0.6A @ 13.5V DC (Direction w/heater) 2.0A @ 28V DC (High Beam w/heater) 1.8A @ 28V DC (Low Beam w/heater) 1.4A @ 28V DC (DRL w/heater) 1.2A @ 28V DC (Parking w/heater) 0.4A @ 28V DC (Direction w/heater)

Print date: 2026-11-25
© 2026 J.W. Speaker Corporation • Germantown, WI U.S.A.
www.jwspeaker.com • speaker@jwspeaker.com • 262.251.6660

J.W. SPEAKER® Engineered. Lighting. Solutions.

LED Headlight – Model 8633 Evolution

REGULATORY STANDARDS COMPLIANCE

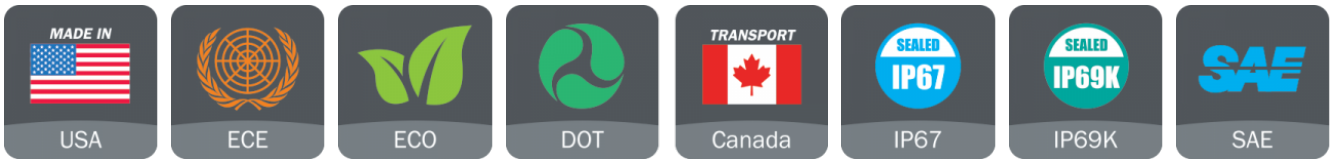

Buy America Standards	ECE Reg 10
ECE Reg 148 - 1b	ECE Reg 148 - A
ECE Reg 148 - RL	ECE Reg 149 - HC
ECE Reg 149 - HR	Eco Friendly
FMVSS 108 s10.1 (Table XIX)	FMVSS 108 s10.1 (Table XVIII)
FMVSS 108 s7.1 (Table VI)	FMVSS 108 s7.8 (Table XIV)
IEC IP67	IEC IP69K
SAE J2087	SAE J222
SAE J588	

© 2026 J.W. Speaker Corporation • Germantown, WI U.S.A.
www.jwspeaker.com • speaker@jwspeaker.com • 262.251.6660

J.W. SPEAKER® Engineered. Lighting. Solutions.

PART NUMBER 0561301

LED Headlight – Model 8633 Evolution

PHOTOMETRIC SPECIFICATIONS

Raw Lumen Output	2925 HB / 2025 LB
Effective Lumen Output	1000 HB / 660 LB
Candela Output	51000 HB / 23000 LB
Nominal LED Color Temperature	5665 K
Beam Pattern(s)	Forward Lighting - Daytime Running Light Forward Lighting - High Beam (ECE) Forward Lighting - Low Beam (ECE Right Hand) Signalization - Front Position Signalization - Marker Signalization - Turn (Front)

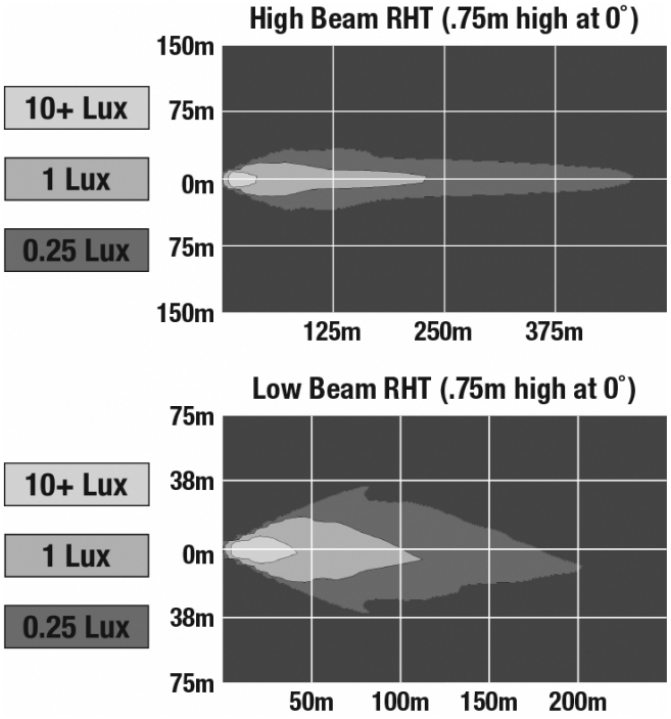

APPLICATIONS



PRODUCT WARNINGS

For California residents:
⚠ **WARNING:** Cancer and reproductive harm - www.P65Warnings.ca.gov.
⚠ **AVERTISSEMENT:** Cancer et effet nocif sur la reproduction - www.P65Warnings.ca.gov.

Print date: 2026-11-25
© 2026 J.W. Speaker Corporation • Germantown, WI U.S.A.
www.jwspeaker.com • speaker@jwspeaker.com • 262.251.6660

J.W. SPEAKER® Engineered. Lighting. Solutions.

LED Headlight – Model 8633 Evolution

ACCESSORIES



Part Number 3268991
5 Function Wire Assembly for Model 8633

RELATED PRODUCTS



Part Number 0561303
12/24V DOT/ECE LED RHT Heated Headlight w/ Turn Signal, DRL, & FP - 2 Light Kit (NO WIRE ASSEMBLY)

© 2026 J.W. Speaker Corporation • Germantown, WI U.S.A.
www.jwspeaker.com • speaker@jwspeaker.com • 262.251.6660

J.W. SPEAKER® Engineered. Lighting. Solutions.