PART NUMBER 8200181

Mounting Assembly Adapter Kit for Fog Lights Model 6045

PRODUCT INFORMATION

Description	Mounting Assembly Adapter Kit for Fog Lights Model 6045
Height	101.60 mm / 4 in
Width	101.60 mm / 4 in
Shape	Round
Bezel Color	Chrome
Shipping Weight	1.30 lbs / 0.59 kgs



PRODUCT DIMENSIONS

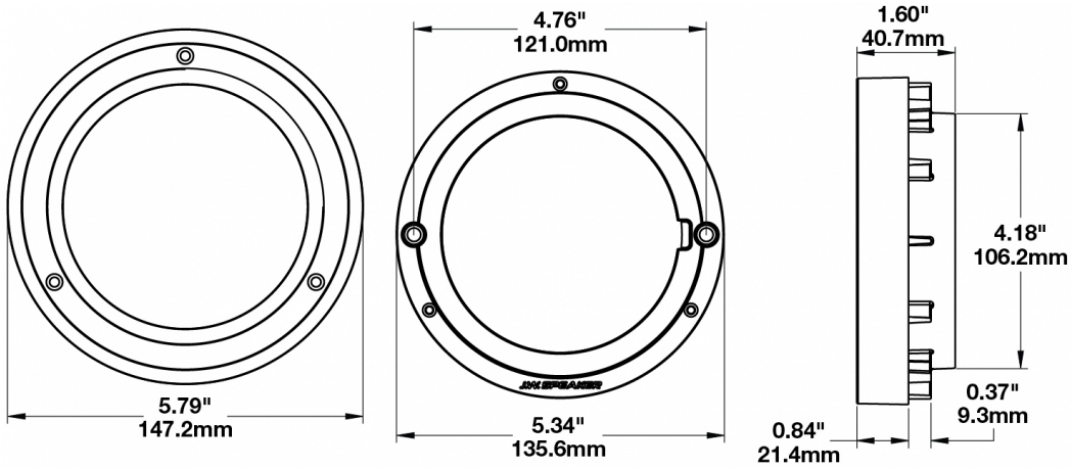

Print date: 2026-11-25

© 2026 J.W. Speaker Corporation • Germantown, WI U.S.A.

www.jwspeaker.com • speaker@jwspeaker.com • 262.251.6660

J.W. SPEAKER® Engineered. Lighting. Solutions.

PART NUMBER 8200181

Mounting Assembly Adapter Kit for Fog Lights Model 6045

REGULATORY STANDARDS COMPLIANCE



Buy America Standards Eco Friendly

APPLICATIONS



ADDITIONAL INFORMATION

Mounting Assmebly includes:
(2) Chrome bezels
(6) #6 flat head stainless sheet metal screws
(2) Adapter brackets
(4) M5 socket head cap screws
(8) M5 locknuts
(4) 5mm washers
(1) Instruction sheet

Note: This kit does not come with fog lamps – only the Mounting Assembly.

PRODUCT WARNINGS

For California residents:
⚠ **WARNING:** Cancer and reproductive harm - www.P65Warnings.ca.gov.
⚠ **AVERTISSEMENT:** Cancer et effet nocif sur la reproduction - www.P65Warnings.ca.gov.

Print date: 2026-11-25
© 2026 J.W. Speaker Corporation • Germantown, WI U.S.A.
www.jwspeaker.com • speaker@jwspeaker.com • 262.251.6660

J.W. SPEAKER® Engineered. Lighting. Solutions.

PART NUMBER 8200181

Mounting Assembly Adapter Kit for Fog Lights Model 6045

SUITS THESE PRODUCTS



4" Round LED Fog Lights
LED Fog Lights - Model 6045

© 2026 J.W. Speaker Corporation • Germantown, WI U.S.A.
www.jwspeaker.com • speaker@jwspeaker.com • 262.251.6660

J.W. SPEAKER® Engineered. Lighting. Solutions.