PART NUMBER 0551653

LED Fog Lights - Model 6045

PRODUCT INFORMATION

Description	12V SAE/ECE RHT LED Fog Light with Chrome Inner Bezel Kit with Mounting Assembly 8200181
Height	111.76 mm / 4.4 in
Width	111.76 mm / 4.4 in
Depth	59.18 mm / 2.33 in
Shape	Round
Outer Lens Material	Polycarbonate
Outer Lens Color	Clear
Housing Material	Aluminum
Housing Color	Black
Bezel Color	Chrome
Mounting Hardware Description	94.8mm
Retrofits	PAR36
Minimum Operating Temperature	-40 °C / -40 °F
Maximum Operating Temperature	65 °C / 149 °F
Mating Connector	Deutsch DT06-2S-E003
Product Weight	1.00 lbs / 0.45 kgs
Shipping Weight	2.90 lbs / 1.32 kgs
Additional Information	Kit includes (2) fog lamps and (1) mounting assmebly kit #8200181



Print date: 2026-11-25

© 2026 J.W. Speaker Corporation • Germantown, WI U.S.A.

www.jwspeaker.com • speaker@jwspeaker.com • 262.251.6660

J.W. SPEAKER® Engineered. Lighting. Solutions.

PART NUMBER 0551653

LED Fog Lights - Model 6045

PRODUCT DIMENSIONS

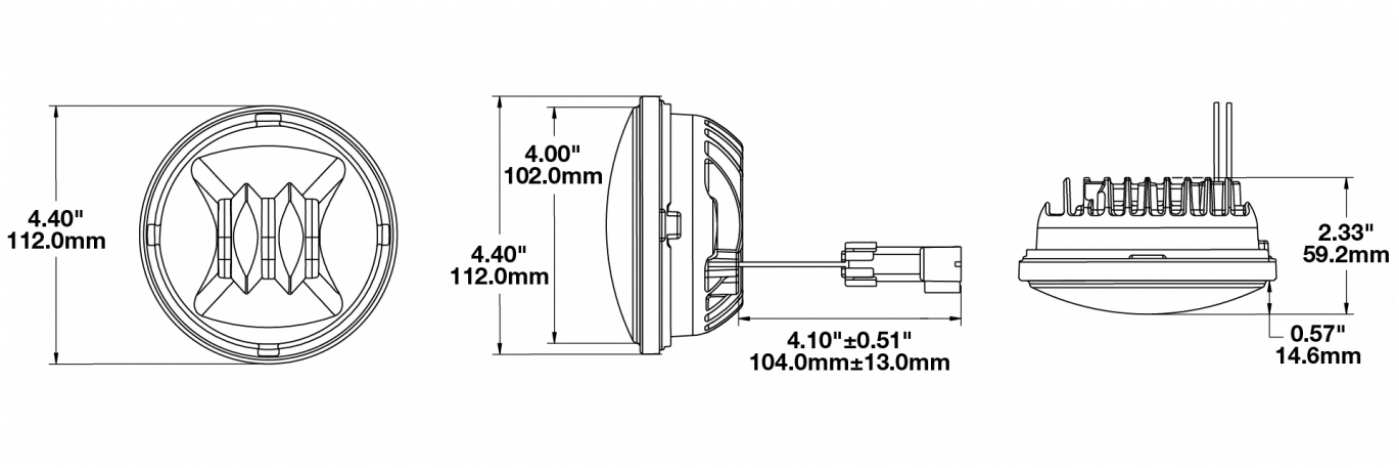

ELECTRICAL SPECIFICATIONS

Input Voltage	12V DC
Operating Voltage	9-18V DC
Transient Spike Protection	150V Peak @ 1 HZ-100 Pulses
Red Wire	Positive
Black Wire	Negative
Current Draw	.75A @ 12V DC

REGULATORY STANDARDS COMPLIANCE



Buy America Standards
Eco Friendly
SAE J583

ECE Reg 19
IEC IP67

Print date: 2026-11-25

© 2026 J.W. Speaker Corporation • Germantown, WI U.S.A.

www.jwspeaker.com • speaker@jwspeaker.com • 262.251.6660

J.W. SPEAKER® Engineered. Lighting. Solutions.

PART NUMBER 0551653

LED Fog Lights - Model 6045

PHOTOMETRIC SPECIFICATIONS

Raw Lumen Output	750
Effective Lumen Output	500
Nominal LED Color Temperature	5000 K
Beam Pattern(s)	Forward Lighting - Fog

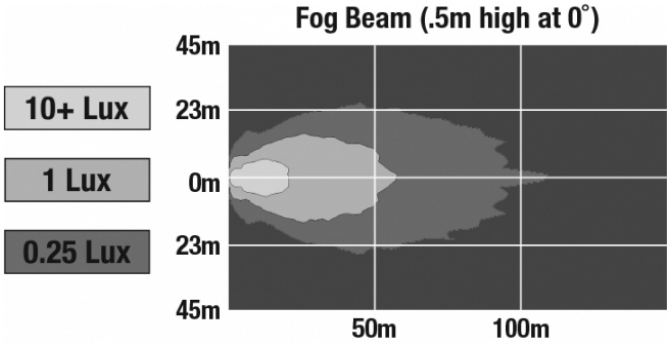

APPLICATIONS

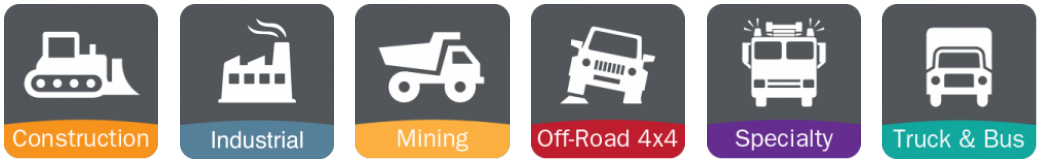

PRODUCT WARNINGS

For California residents:
⚠ **WARNING:** Cancer and reproductive harm - www.P65Warnings.ca.gov.
⚠ **AVERTISSEMENT:** Cancer et effet nocif sur la reproduction - www.P65Warnings.ca.gov.

ACCESSORIES



Part Number 8200181
Mounting Assembly Adapter Kit for Fog Lights Model 6045

Print date: 2026-11-25
© 2026 J.W. Speaker Corporation • Germantown, WI U.S.A.
www.jwspeaker.com • speaker@jwspeaker.com • 262.251.6660

J.W. SPEAKER® Engineered. Lighting. Solutions.

LED Fog Lights - Model 6045

RELATED PRODUCTS



Part Number 0545731
12V SAE/ECE RHT LED Fog Light with Black Inner Bezel



Part Number 0546161
12V SAE/ECE RHT LED Fog Light with Chrome Inner Bezel



Part Number 0551583
12V SAE/ECE LED Fog Light with Black Inner Bezel - 2 Light Kit



Part Number 0551593
12V SAE/ECE LED Fog Light with Chrome Inner Bezel - 2 Light Kit

© 2026 J.W. Speaker Corporation • Germantown, WI U.S.A.
www.jwspeaker.com • speaker@jwspeaker.com • 262.251.6660

J.W. SPEAKER® Engineered. Lighting. Solutions.