PART NUMBER 5856032

Replacement Mounting Assembly for Model 150 LED Lights

PRODUCT INFORMATION

Description	Replacement Mounting Assembly for Model 150 LED Lights
Product Weight	0.04 lbs / 0.02 kgs
Shipping Weight	29.00 lbs / 13.15 kgs



PRODUCT DIMENSIONS

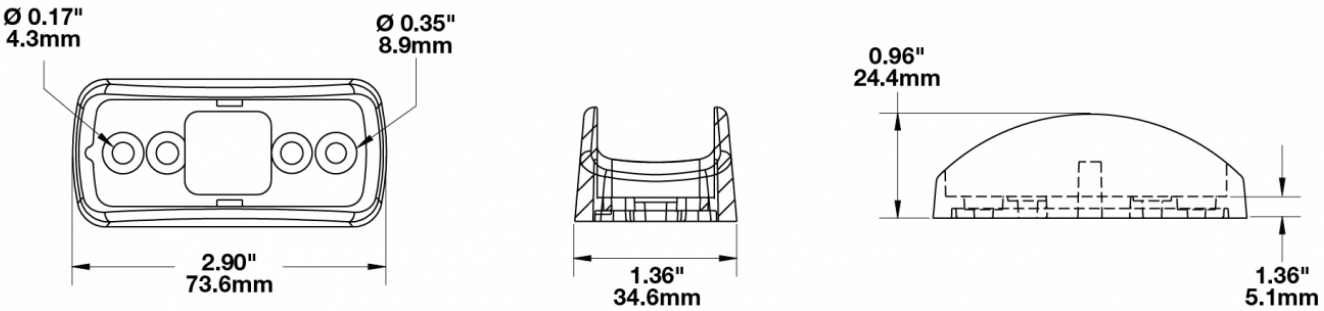

Print date: 2026-11-24
© 2026 J.W. Speaker Corporation • Germantown, WI U.S.A.
www.jwspeaker.com • speaker@jwspeaker.com • 262.251.6660

J.W. SPEAKER® Engineered. Lighting. Solutions.

PART NUMBER 5856032

Replacement Mounting Assembly for Model 150 LED Lights

REGULATORY STANDARDS COMPLIANCE



Buy America Standards Eco Friendly

APPLICATIONS



PRODUCT WARNINGS

For California residents:
⚠ **WARNING:** Cancer and reproductive harm - www.P65Warnings.ca.gov.
⚠ **AVERTISSEMENT:** Cancer et effet nocif sur la reproduction - www.P65Warnings.ca.gov.

Print date: 2026-11-24
© 2026 J.W. Speaker Corporation • Germantown, WI U.S.A.
www.jwspeaker.com • speaker@jwspeaker.com • 262.251.6660

J.W. SPEAKER® Engineered. Lighting. Solutions.

PART NUMBER 5856032

Replacement Mounting Assembly for Model 150 LED Lights

SUITS THESE PRODUCTS



3" x 1" LED Dome & Marker Lights
LED Dome & Marker Lights - Model 150

© 2026 J.W. Speaker Corporation • Germantown, WI U.S.A.
www.jwspeaker.com • speaker@jwspeaker.com • 262.251.6660

J.W. SPEAKER® Engineered. Lighting. Solutions.