PART NUMBER 0205341

LED Dome & Marker Lights - Model 150

PRODUCT INFORMATION

Description	12-24V ECE/SAE Amber LED Side Marker Light with Mounting Assembly
Height	22.61 mm / 0.89 in
Width	64.01 mm / 2.52 in
Depth	24.64 mm / 0.97 in
Shape	Rectangular
Outer Lens Material	Acrylic
Outer Lens Color	Amber
Housing Material	ABS
Housing Color	Black
Mounting Type	Low Profile Mount
Minimum Operating Temperature	-40 °C / -40 °F
Maximum Operating Temperature	65 °C / 149 °F
Connector or Wiring	118" Bare Leads
Product Weight	0.16 lbs / 0.07 kgs
Shipping Weight	0.16 lbs / 0.07 kgs



PRODUCT DIMENSIONS

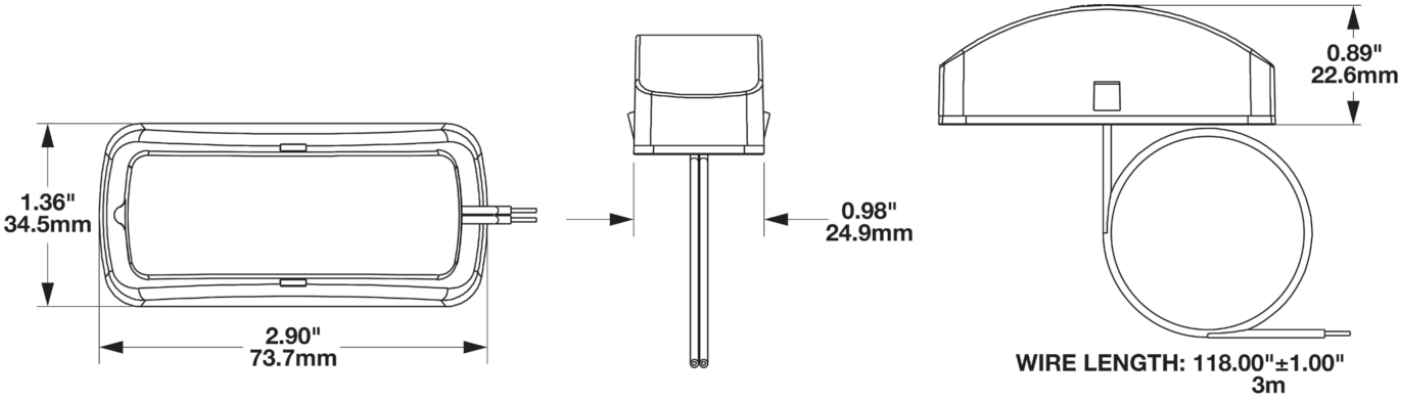

Print date: 2026-11-24
© 2026 J.W. Speaker Corporation • Germantown, WI U.S.A.
www.jwspeaker.com • speaker@jwspeaker.com • 262.251.6660

J.W. SPEAKER® Engineered. Lighting. Solutions.

PART NUMBER 0205341

LED Dome & Marker Lights - Model 150

ELECTRICAL SPECIFICATIONS

Input Voltage	12-24V DC
Black Wire	Ground for Right Arrow
White Wire	Ground for Left Arrow
Red Wire	Positive
Current Draw	0.090 (Max)A @ 12V DC

REGULATORY STANDARDS COMPLIANCE



Buy America Standards
Eco Friendly
FMVSS 108 s7.5 (Table XI)
SAE J592
ECE Reg 91
FMVSS 108 s7.4 (Table X)
IEC IP67

PHOTOMETRIC SPECIFICATIONS

Beam Pattern(s) Signalization - Clearance

APPLICATIONS



Print date: 2026-11-24
© 2026 J.W. Speaker Corporation • Germantown, WI U.S.A.
www.jwspeaker.com • speaker@jwspeaker.com • 262.251.6660

J.W. SPEAKER®
Engineered. Lighting. Solutions.

LED Dome & Marker Lights - Model 150

PRODUCT WARNINGS

For California residents:
⚠ **WARNING:** Cancer and reproductive harm - www.P65Warnings.ca.gov.
⚠ **AVERTISSEMENT:** Cancer et effet nocif sur la reproduction - www.P65Warnings.ca.gov.

ACCESSORIES



Part Number 5856032
Replacement Mounting Assembly for Model 150 LED Lights

RELATED PRODUCTS



Part Number 0205321
12-24V ECE/SAE Red LED Side Marker Light with Mounting Assembly



Part Number 0443051
12-24V Clear/White LED Dome Light with Mounting Assembly

© 2026 J.W. Speaker Corporation • Germantown, WI U.S.A.
www.jwspeaker.com • speaker@jwspeaker.com • 262.251.6660

J.W. SPEAKER® Engineered. Lighting. Solutions.