PART NUMBER 0205321

LED Dome & Marker Lights - Model 150

PRODUCT INFORMATION

Description	12-24V ECE/SAE Red LED Side Marker Light with Mounting Assembly
Height	22.61 mm / 0.89 in
Width	64.01 mm / 2.52 in
Depth	24.64 mm / 0.97 in
Shape	Rectangular
Outer Lens Material	Acrylic
Outer Lens Color	Red
Housing Material	ABS
Housing Color	Black
Mounting Type	Low Profile Mount
Minimum Operating Temperature	-40 °C / -40 °F
Maximum Operating Temperature	65 °C / 149 °F
Connector or Wiring	118" Bare Leads
Product Weight	0.16 lbs / 0.07 kgs
Shipping Weight	0.16 lbs / 0.07 kgs



PRODUCT DIMENSIONS

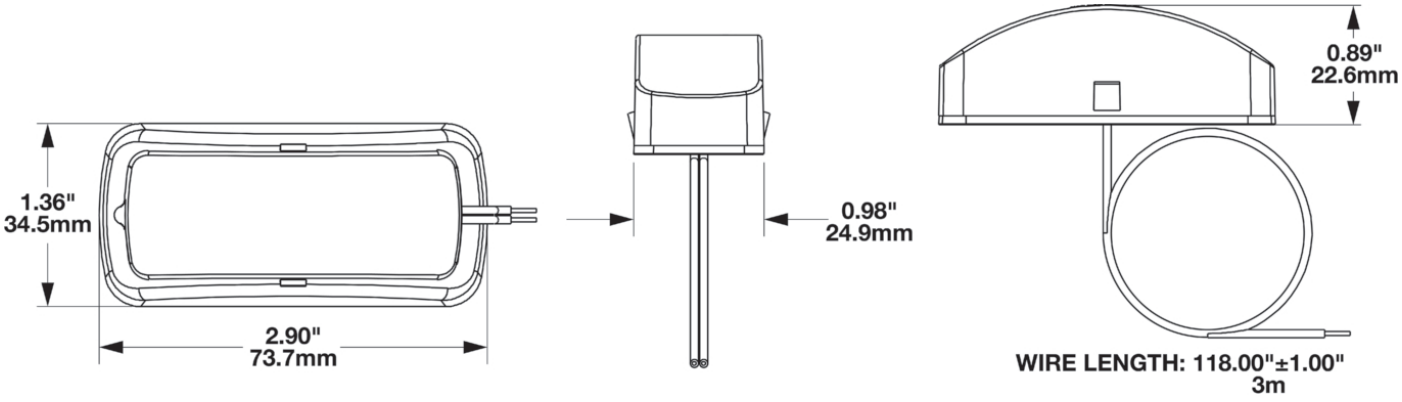

© 2026 J.W. Speaker Corporation • Germantown, WI U.S.A.
www.jwspeaker.com • speaker@jwspeaker.com • 262.251.6660

J.W. SPEAKER® Engineered. Lighting. Solutions.

PART NUMBER 0205321

LED Dome & Marker Lights - Model 150

ELECTRICAL SPECIFICATIONS

Input Voltage	12-24V DC
Red Wire	Positive
Black Wire	Negative
Current Draw	0.090 (Max)A @ 12V DC

REGULATORY STANDARDS COMPLIANCE



Buy America Standards
Eco Friendly
FMVSS 108 s7.5 (Table XI)
SAE J592
ECE Reg 7
FMVSS 108 s7.4 (Table X)
IEC IP67

PHOTOMETRIC SPECIFICATIONS

Beam Pattern(s) Signalization - Clearance

APPLICATIONS



Print date: 2026-11-24
© 2026 J.W. Speaker Corporation • Germantown, WI U.S.A.
www.jwspeaker.com • speaker@jwspeaker.com • 262.251.6660

J.W. SPEAKER® Engineered. Lighting. Solutions.

LED Dome & Marker Lights - Model 150

PRODUCT WARNINGS

For California residents:
⚠ **WARNING:** Cancer and reproductive harm - www.P65Warnings.ca.gov.
⚠ **AVERTISSEMENT:** Cancer et effet nocif sur la reproduction - www.P65Warnings.ca.gov.

ACCESSORIES



Part Number 5856032
Replacement Mounting Assembly for Model 150 LED Lights

RELATED PRODUCTS



Part Number 0205341
12-24V ECE/SAE Amber LED Side Marker Light with Mounting Assembly



Part Number 0443051
12-24V Clear/White LED Dome Light with Mounting Assembly

© 2026 J.W. Speaker Corporation • Germantown, WI U.S.A.
www.jwspeaker.com • speaker@jwspeaker.com • 262.251.6660

J.W. SPEAKER® Engineered. Lighting. Solutions.