PART NUMBER 1801961

LED Work Lights – Model 7150

PRODUCT INFORMATION

Description	24V LED Work Light with Polycarbonate Lens & Trapezoid Beam Pattern
Height	155.96 mm / 6.14 in
Width	172.47 mm / 6.79 in
Depth	77.11 mm / 3.04 in
Shape	Oval
Outer Lens Material	Polycarbonate
Outer Lens Color	Clear
Housing Material	Die-Cast Aluminum
Mounting Hardware Description	(x1) 1/2"-13 x 1"
Minimum Operating Temperature	-40 °C / -40 °F
Maximum Operating Temperature	65 °C / 149 °F
Connector or Wiring	Deutsch DT04-2P
Mating Connector	Deutsch DT06-2S
Product Weight	2.80 lbs / 1.27 kgs
Shipping Weight	3.05 lbs / 1.38 kgs
Additional Information	Wire Harness: JWS part number 3271791.

Print date: 2024-04-25

© 2024 J.W. Speaker Corporation • Germantown, WI U.S.A.

www.jwspeaker.com • speaker@jwspeaker.com • 262.251.6660

J.W. SPEAKER® Engineered. Lighting. Solutions.

PART NUMBER 1801961

LED Work Lights – Model 7150

PRODUCT DIMENSIONS

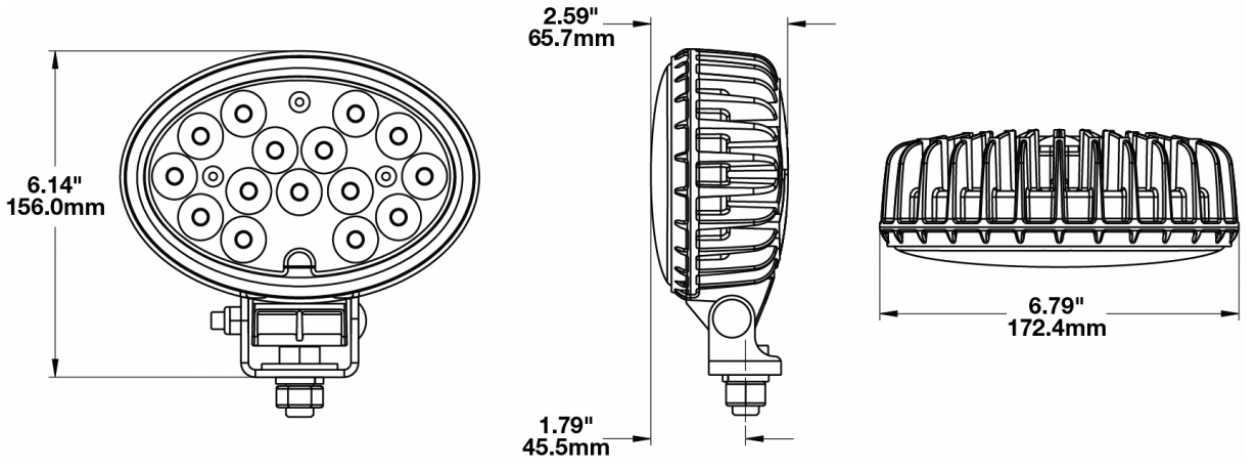

ELECTRICAL SPECIFICATIONS

Input Voltage	24V DC
Operating Voltage	16-32V DC
Transient Spike Protection	330V Peak @ 1 HZ-100 Pulses
Current Draw	3.2A @ 24V DC

REGULATORY STANDARDS COMPLIANCE

IEC IP69K

SAE J1455

Print date: 2024-04-25
© 2024 J.W. Speaker Corporation • Germantown, WI U.S.A.
www.jwspeaker.com • speaker@jwspeaker.com • 262.251.6660

J.W. SPEAKER® Engineered. Lighting. Solutions.

PART NUMBER 1801961

LED Work Lights – Model 7150

PHOTOMETRIC SPECIFICATIONS

Raw Lumen Output	5,400
Effective Lumen Output	4,500
Nominal LED Color Temperature	5000 K
Beam Pattern(s)	Forward Lighting - Trapezoid

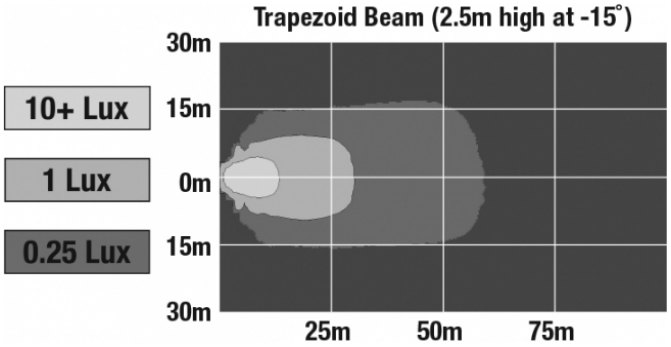

APPLICATIONS

PRODUCT WARNINGS

For California residents:
⚠ **WARNING:** Cancer and reproductive harm - www.P65Warnings.ca.gov.
⚠ **AVERTISSEMENT:** Cancer et effet nocif sur la reproduction - www.P65Warnings.ca.gov.

© 2024 J.W. Speaker Corporation • Germantown, WI U.S.A.
www.jwspeaker.com • speaker@jwspeaker.com • 262.251.6660

J.W. SPEAKER® Engineered. Lighting. Solutions.