PART NUMBER 8200101

Stainless Steel Mounting Kit for Work Lights & Marine Lights

PRODUCT INFORMATION

Description	Stainless Steel Mounting Kit for Work Lights & Marine Lights
Shipping Weight	0.30 lbs / 0.14 kgs



PRODUCT DIMENSIONS

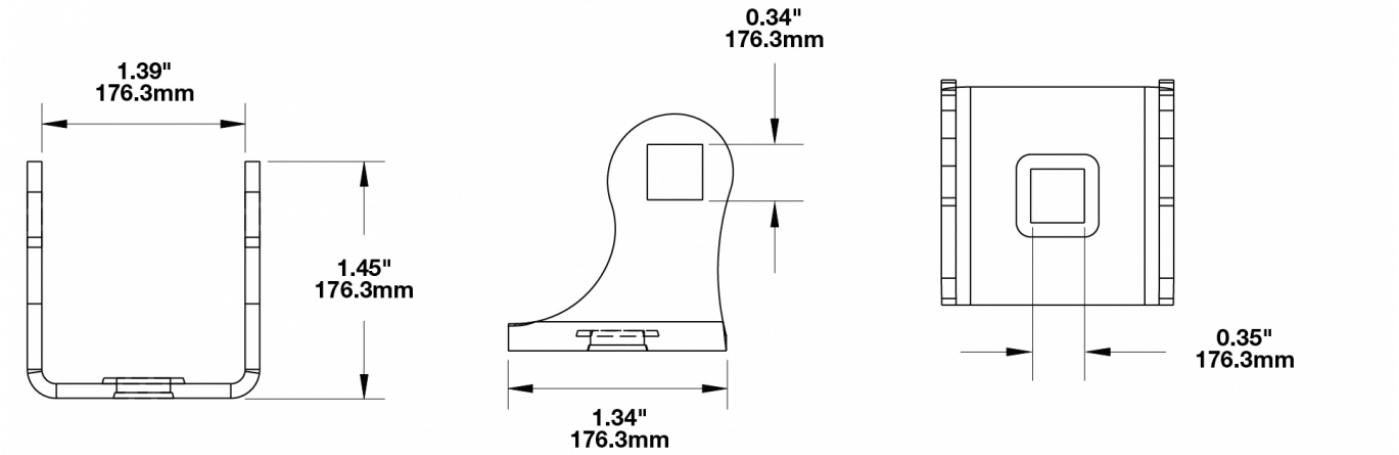

Print date: 2026-11-26
© 2026 J.W. Speaker Corporation • Germantown, WI U.S.A.
www.jwspeaker.com • speaker@jwspeaker.com • 262.251.6660

J.W. SPEAKER® Engineered. Lighting. Solutions.

Stainless Steel Mounting Kit for Work Lights & Marine Lights

REGULATORY STANDARDS COMPLIANCE



Buy America Standards Eco Friendly

APPLICATIONS



PRODUCT WARNINGS

For California residents:
⚠ **WARNING:** Cancer and reproductive harm - www.P65Warnings.ca.gov.
⚠ **AVERTISSEMENT:** Cancer et effet nocif sur la reproduction - www.P65Warnings.ca.gov.

© 2026 J.W. Speaker Corporation • Germantown, WI U.S.A.
www.jwspeaker.com • speaker@jwspeaker.com • 262.251.6660

J.W. SPEAKER® Engineered. Lighting. Solutions.

PART NUMBER 8200101

Stainless Steel Mounting Kit for Work Lights & Marine Lights

SUITS THESE PRODUCTS



5" x 3" LED Backup Camera Light and Reverse Light
LED Backup Camera Light and Reverse Light - Model 778 XD

© 2026 J.W. Speaker Corporation • Germantown, WI U.S.A.
www.jwspeaker.com • speaker@jwspeaker.com • 262.251.6660

J.W. SPEAKER® Engineered. Lighting. Solutions.