PART NUMBER 1706721

LED Backup Camera Light and Reverse Light - Model 778 XD

PRODUCT INFORMATION

Description	12-48V SAE/ECE LED Backup Camera Light
Height	137.16 mm / 5.4 in
Width	144.02 mm / 5.67 in
Depth	56.90 mm / 2.24 in
Shape	Oval
Outer Lens Material	Polycarbonate
Outer Lens Color	Clear
Housing Material	Polycarbonate
Housing Color	Black
Mounting Hardware Description	(x1) 5/16"-18 x 1.00" Mounting Bolt
Mounting Type	Universal Pedestal Mount
Minimum Operating Temperature	-40 °C / -40 °F
Maximum Operating Temperature	65 °C / 149 °F
Connector or Wiring	Integrated 2-Pin Deutsch Weather-Proof Socket (DT04-2P)
Mating Connector	2-Pin Deutsch Weather-Proof Plug (DT06-2S)
Product Weight	0.75 lbs / 0.34 kgs
Shipping Weight	6.69 lbs / 3.03 kgs



Print date: 2026-11-26

© 2026 J.W. Speaker Corporation • Germantown, WI U.S.A.

www.jwspeaker.com • speaker@jwspeaker.com • 262.251.6660

J.W. SPEAKER® Engineered. Lighting. Solutions.

PART NUMBER 1706721

LED Backup Camera Light and Reverse Light - Model 778 XD

PRODUCT DIMENSIONS

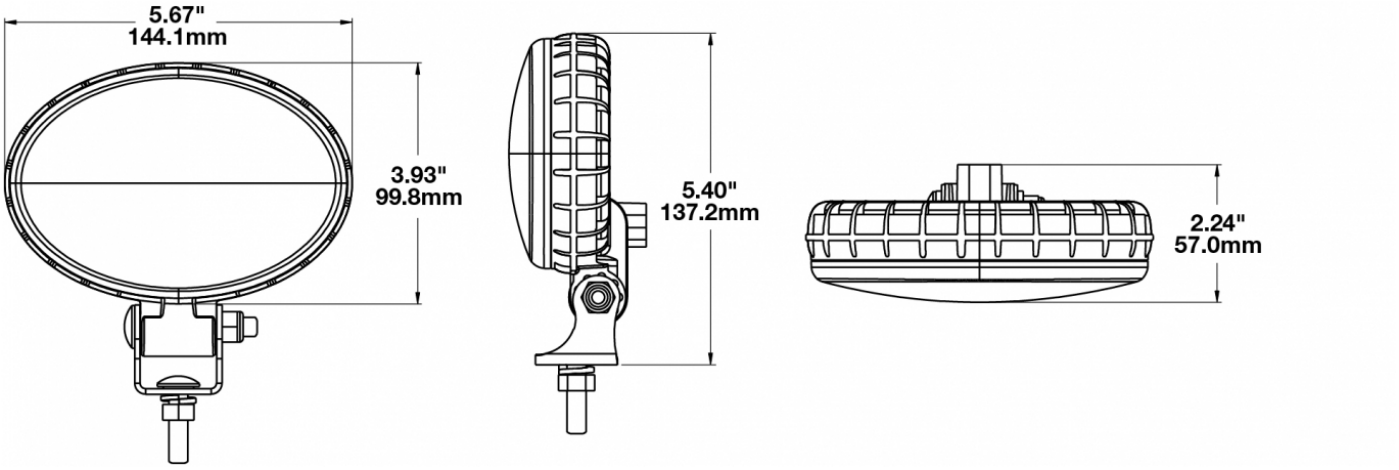

ELECTRICAL SPECIFICATIONS

Input Voltage	12-48V DC
Operating Voltage	10-55V DC
Transient Spike Protection	330V Peak @ 1 HZ-100 Pulses
Red Wire	Positive
Black Wire	Negative
Current Draw	1.00A @ 12V DC 0.48A @ 24V DC 0.33A @ 36V DC 0.25A @ 48V DC

Print date: 2026-11-26
© 2026 J.W. Speaker Corporation • Germantown, WI U.S.A.
www.jwspeaker.com • speaker@jwspeaker.com • 262.251.6660

J.W. SPEAKER® Engineered. Lighting. Solutions.

PART NUMBER 1706721

LED Backup Camera Light and Reverse Light - Model 778 XD

REGULATORY STANDARDS COMPLIANCE



Buy America Standards	CISPR 12
CISPR 22	ECE Reg 23
Eco Friendly	FMVSS 108 s7.6 (Table XII)
IEC IP67	SAE J1113-13
SAE J1113-4	SAE J593

PHOTOMETRIC SPECIFICATIONS

Effective Lumen Output	576
Candela Output	275
Nominal LED Color Temperature	5000 K
Beam Pattern(s)	Forward Lighting - Spot

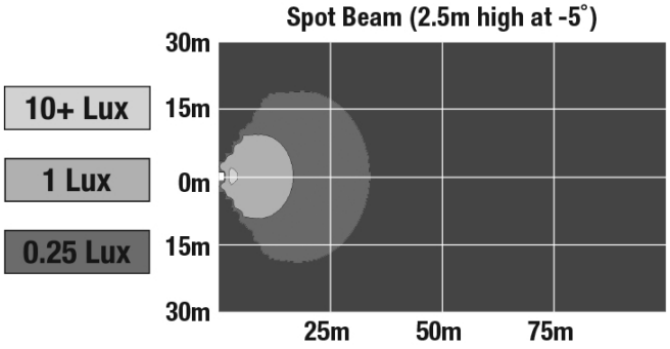

APPLICATIONS



Print date: 2026-11-26

© 2026 J.W. Speaker Corporation • Germantown, WI U.S.A.

www.jwspeaker.com • speaker@jwspeaker.com • 262.251.6660

J.W. SPEAKER® Engineered. Lighting. Solutions.

LED Backup Camera Light and Reverse Light - Model 778 XD

PRODUCT WARNINGS

For California residents:
⚠ **WARNING:** Cancer and reproductive harm - www.P65Warnings.ca.gov.
⚠ **AVERTISSEMENT:** Cancer et effet nocif sur la reproduction - www.P65Warnings.ca.gov.

ACCESSORIES



Part Number 8200011
Magnet Mount Kit for XD Series Work Lights



Part Number 8200101
Stainless Steel Mounting Kit for Work Lights & Marine Lights

© 2026 J.W. Speaker Corporation • Germantown, WI U.S.A.
www.jwspeaker.com • speaker@jwspeaker.com • 262.251.6660

J.W. SPEAKER® Engineered. Lighting. Solutions.