PART NUMBER 5874291

Red Replacement Lens Cover for Model TS3001R

PRODUCT INFORMATION

Description	Red Replacement Lens Cover for Model TS3001R
Height	150.50 mm / 5.93 in
Width	150.50 mm / 5.93 in
Depth	33.20 mm / 1.31 in
Shape	Round
Outer Lens Material	Polycarbonate
Outer Lens Color	Red
Product Weight	0.13 lbs / 0.06 kgs
Shipping Weight	0.80 lbs / 0.36 kgs



PRODUCT DIMENSIONS

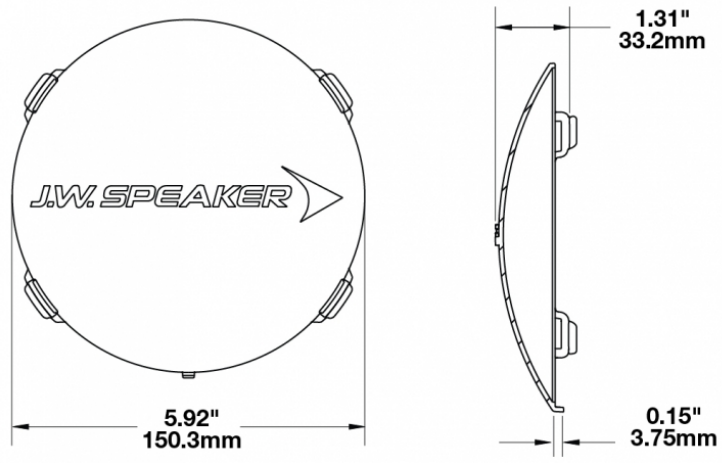

Print date: 2026-11-29

© 2026 J.W. Speaker Corporation • Germantown, WI U.S.A.

www.jwspeaker.com • speaker@jwspeaker.com • 262.251.6660

J.W. SPEAKER
Engineered. Lighting. Solutions.

PART NUMBER 5874291

Red Replacement Lens Cover for Model TS3001R

REGULATORY STANDARDS COMPLIANCE



Buy America Standards Eco Friendly

APPLICATIONS



PRODUCT WARNINGS

For California residents:
⚠ **WARNING:** Cancer and reproductive harm - www.P65Warnings.ca.gov.
⚠ **AVERTISSEMENT:** Cancer et effet nocif sur la reproduction - www.P65Warnings.ca.gov.

SUITS THESE PRODUCTS



6" Round LED Auxiliary Light
LED Auxiliary Work Light - Model TS3001R

Print date: 2026-11-29
© 2026 J.W. Speaker Corporation • Germantown, WI U.S.A.
www.jwspeaker.com • speaker@jwspeaker.com • 262.251.6660

J.W. SPEAKER® Engineered. Lighting. Solutions.