PART NUMBER 0550463

LED Auxiliary Work Light - Model TS3001R

PRODUCT INFORMATION

Description	12-24V ECE LED Auxiliary Light with Driving Beam - 2 Light Kit
Height	172.72 mm / 6.8 in
Width	152.40 mm / 6 in
Depth	104.14 mm / 4.1 in
Shape	Round
Outer Lens Material	Polycarbonate
Outer Lens Color	Clear
Housing Material	Xenoy
Housing Color	Black
Mounting Hardware Description	(x1) 3/8-16 x 1.5" Stainless Steel Screws
Mounting Type	Bracket
Connector or Wiring	Integral Deutsch DT04-2P
Mating Connector	DT06-2P
Product Weight	2.03 lbs / 0.92 kgs
Shipping Weight	6.11 lbs / 2.77 kgs



PRODUCT DIMENSIONS

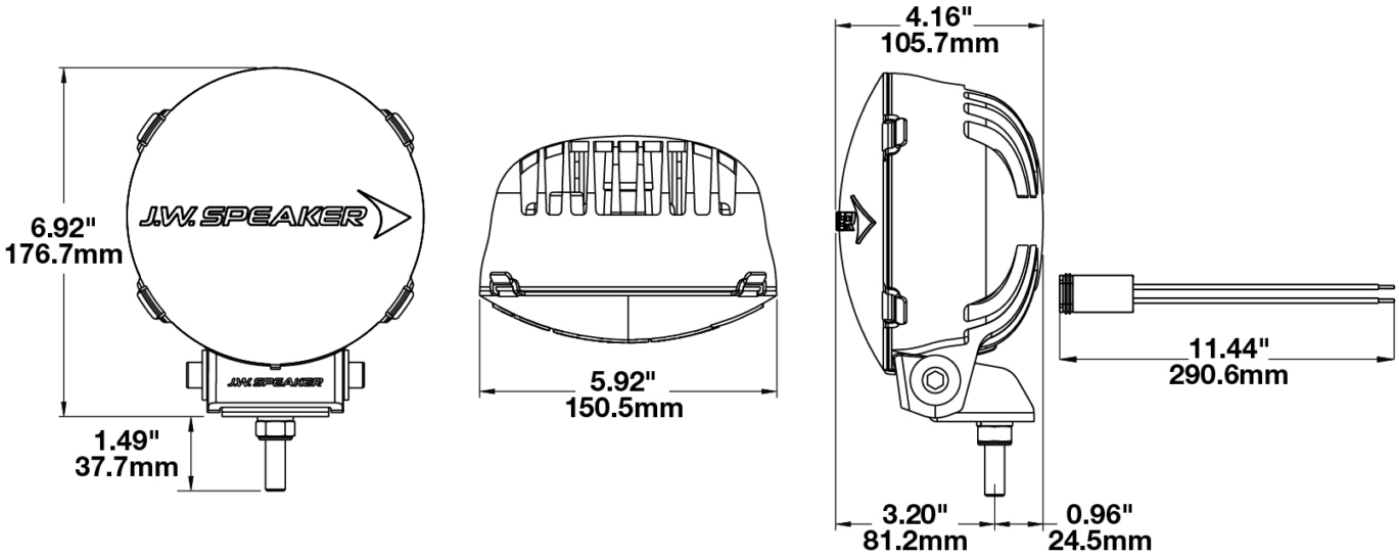

Print date: 2026-11-29

© 2026 J.W. Speaker Corporation • Germantown, WI U.S.A.

www.jwspeaker.com • speaker@jwspeaker.com • 262.251.6660

J.W. SPEAKER® Engineered. Lighting. Solutions.

PART NUMBER 0550463

LED Auxiliary Work Light - Model TS3001R

ELECTRICAL SPECIFICATIONS

Input Voltage	12-24V DC
Operating Voltage	9-24V DC
Red Wire	Positive
Black Wire	Negative
Current Draw	1.15A @ 12V DC (Standard) 0.60A @ 24V DC (Standard) 2.15A @ 12V DC (Jeep) 1.00A @ 24V DC (Jeep)

REGULATORY STANDARDS COMPLIANCE



Buy America Standards	ECE Reg 112
Eco Friendly	IEC IP67

PHOTOMETRIC SPECIFICATIONS

Raw Lumen Output	1,960
Effective Lumen Output	1,080
Candela Output	55,000
Beam Pattern(s)	Forward Lighting - Driving

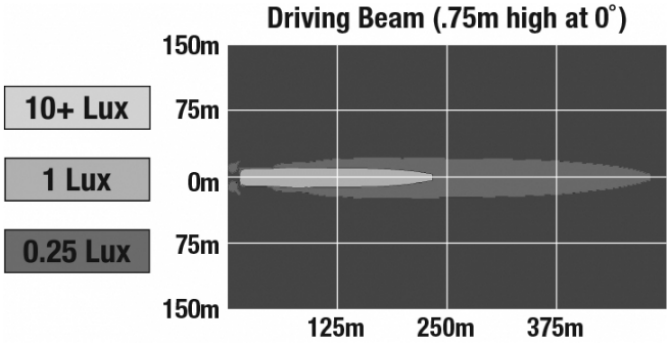

Print date: 2026-11-29

© 2026 J.W. Speaker Corporation • Germantown, WI U.S.A.

www.jwspeaker.com • speaker@jwspeaker.com • 262.251.6660

J.W. SPEAKER® Engineered. Lighting. Solutions.

PART NUMBER 0550463

LED Auxiliary Work Light - Model TS3001R

APPLICATIONS

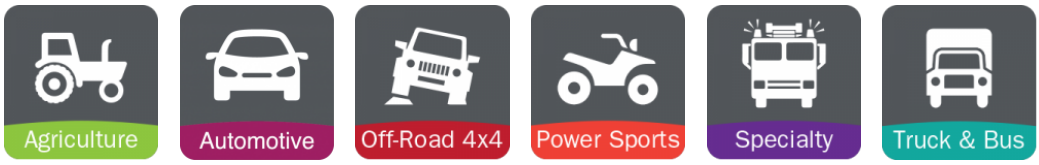

PRODUCT WARNINGS

For California residents:
⚠ **WARNING:** Cancer and reproductive harm - www.P65Warnings.ca.gov.
⚠ **AVERTISSEMENT:** Cancer et effet nocif sur la reproduction - www.P65Warnings.ca.gov.

ACCESSORIES



Part Number 5874271
Clear Replacement Lens Cover for Model TS3001R



Part Number 5874281
Amber Replacement Lens Cover for Model TS3001R



Part Number 5874291
Red Replacement Lens Cover for Model TS3001R



Part Number 5874301
Blue Replacement Lens Cover for Model TS3001R



Part Number 6149203
A-Pillar Mounting Kit for Jeep JK



Part Number 6149233
A-Pillar Mounting Kit for Jeep TJ

Print date: 2026-11-29
© 2026 J.W. Speaker Corporation • Germantown, WI U.S.A.
www.jwspeaker.com • speaker@jwspeaker.com • 262.251.6660

J.W. SPEAKER® Engineered. Lighting. Solutions.

LED Auxiliary Work Light - Model TS3001R

RELATED PRODUCTS



Part Number 0550441
12-24V DOT LED Auxiliary Light with Driving Beam - 1 Light



Part Number 0550443
12-24V DOT LED Auxiliary Light with Driving Beam - 2 Light Kit



Part Number 0550461
12-24V ECE LED Auxiliary Light with Driving Beam - 1 Light



Part Number 0550481
12-24V LED Auxiliary Light with Pencil Beam - 1 Light



Part Number 0550483
12-24V LED Auxiliary Light with Pencil Beam - 2 Light Kit

© 2026 J.W. Speaker Corporation • Germantown, WI U.S.A.
www.jwspeaker.com • speaker@jwspeaker.com • 262.251.6660

J.W. SPEAKER® Engineered. Lighting. Solutions.