PART NUMBER 8200693

8700 Evolution J2 Mounting Kit for Jeep JL

PRODUCT INFORMATION

Description	8700 Evolution J2 Mounting Kit for Jeep JL
Housing Color	Black
Retrofits	2018+ Jeep Wrangler JL OEM Halogen
Product Weight	4.20 lbs / 1.91 kgs
Shipping Weight	5.00 lbs / 2.27 kgs
Additional Information	**Included in Box:** • 2 x Jeep Wrangler JL 7″ Headlight Brackets • 2 x Jeep Wrangler JL Adapter Harness



8700 EVOLUTION J2

© 2026 J.W. Speaker Corporation • Germantown, WI U.S.A.
www.jwspeaker.com • speaker@jwspeaker.com • 262.251.6660

J.W. SPEAKER® Engineered. Lighting. Solutions.

PART NUMBER 8200693

8700 Evolution J2 Mounting Kit for Jeep JL

PRODUCT DIMENSIONS

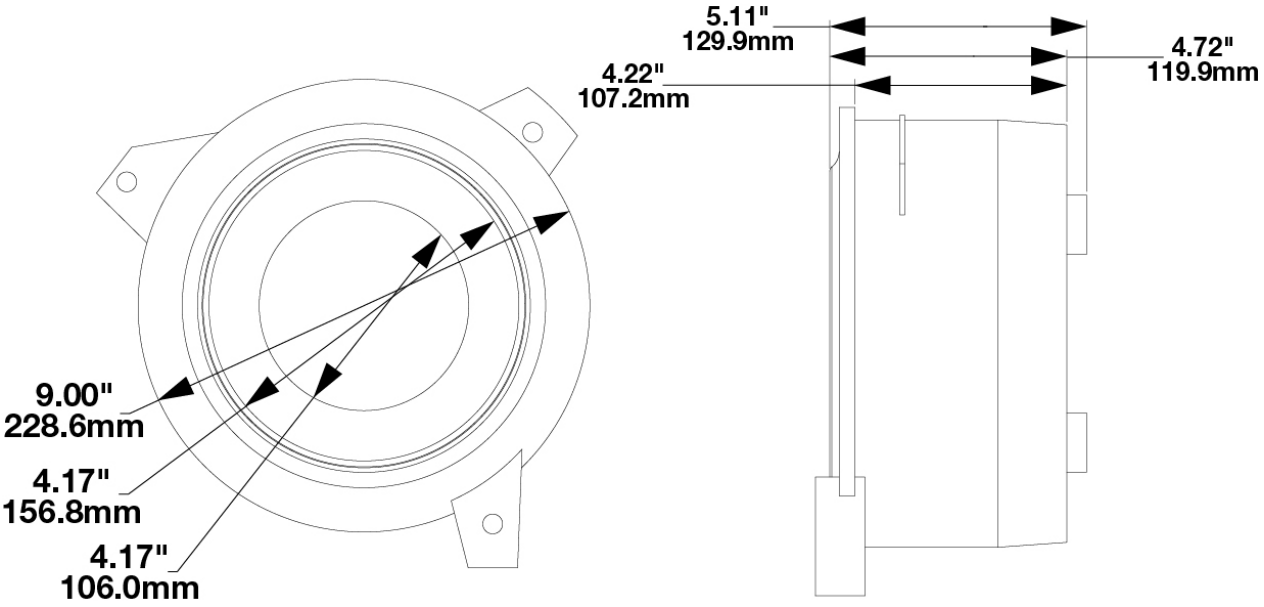

APPLICATIONS



PRODUCT WARNINGS

For California residents:
⚠ **WARNING:** Cancer and reproductive harm - www.P65Warnings.ca.gov.
⚠ **AVERTISSEMENT:** Cancer et effet nocif sur la reproduction - www.P65Warnings.ca.gov.

© 2026 J.W. Speaker Corporation • Germantown, WI U.S.A.
www.jwspeaker.com • speaker@jwspeaker.com • 262.251.6660

J.W. SPEAKER® Engineered. Lighting. Solutions.

PART NUMBER 8200693

8700 Evolution J2 Mounting Kit for Jeep JL

SUITS THESE PRODUCTS



7" Round Jeep Lights
LED Headlights - Model 8700 Evolution J2 Series

© 2026 J.W. Speaker Corporation • Germantown, WI U.S.A.
www.jwspeaker.com • speaker@jwspeaker.com • 262.251.6660

J.W. SPEAKER
Engineered. Lighting. Solutions.