PART NUMBER 0554563

LED Headlights - Model 8700 Evolution J2 Series

PRODUCT INFORMATION

Description	12V ECE LHT LED High & Low Beam Headlights with FP, DRL, & Black Bezel - 2 Light Kit
Height	176.53 mm / 6.95 in
Width	176.53 mm / 6.95 in
Depth	99.82 mm / 3.93 in
Shape	Round
Outer Lens Material	Polycarbonate
Outer Lens Color	Clear
Housing Material	Die-Cast Aluminum
Housing Color	Gray
Bezel Color	Black
Retrofits	7" Round Headlights or 2D1 PAR56
Minimum Operating Temperature	-40 °C / -40 °F
Maximum Operating Temperature	65 °C / 149 °F
Connector or Wiring	H4
Mating Connector	H4 AMP 172615-2
Product Weight	4.75 lbs / 2.15 kgs
Shipping Weight	6.55 lbs / 2.97 kgs



8700 EVOLUTION J2

PRODUCT DIMENSIONS

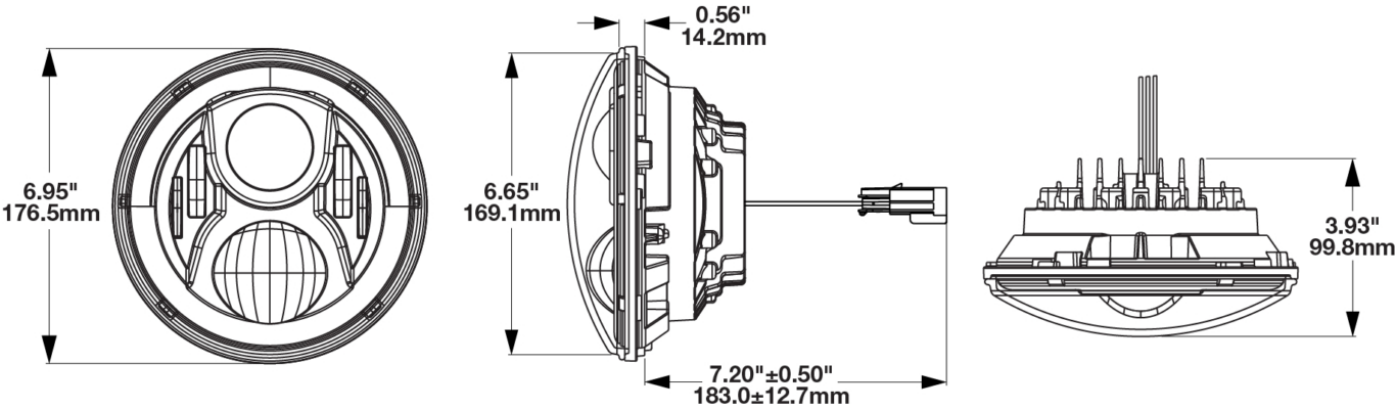

Print date: 2026-11-24

© 2026 J.W. Speaker Corporation • Germantown, WI U.S.A.

www.jwspeaker.com • speaker@jwspeaker.com • 262.251.6660

J.W. SPEAKER® Engineered. Lighting. Solutions.

PART NUMBER 0554563

LED Headlights - Model 8700 Evolution J2 Series

ELECTRICAL SPECIFICATIONS

Input Voltage	12V DC
Operating Voltage	9-16V DC
Black Wire	Ground
White Wire	High Beam
Yellow Wire	Low Beam
Red Wire	Front Position
Blue Wire	DRL
Current Draw	4.20A @ 12V DC (High Beam) 2.00A @ 12V DC (Low Beam) 1.60A @ 12V DC (DRL) 0.16A @ 12V DC (Front Position)

REGULATORY STANDARDS COMPLIANCE



Buy America Standards
ECE Reg 112
ECE Reg 87
IEC IP67
ECE Reg 10
ECE Reg 7
Eco Friendly

© 2026 J.W. Speaker Corporation • Germantown, WI U.S.A.
www.jwspeaker.com • speaker@jwspeaker.com • 262.251.6660

J.W. SPEAKER® Engineered. Lighting. Solutions.

PART NUMBER 0554563

LED Headlights - Model 8700 Evolution J2 Series

PHOTOMETRIC SPECIFICATIONS

Raw Lumen Output	3,200 (High Beam); 1,770 (Low Beam)
Effective Lumen Output	1,260 (High Beam); 750 (Low Beam)
Candela Output	71,500 (High Beam); 35,003 (Low Beam)
Nominal LED Color Temperature	5000 K
Beam Pattern(s)	Forward Lighting - Daytime Running Light Forward Lighting - High Beam (DOT/ECE) Forward Lighting - Low Beam (ECE Left Hand) Signalization - Front Position

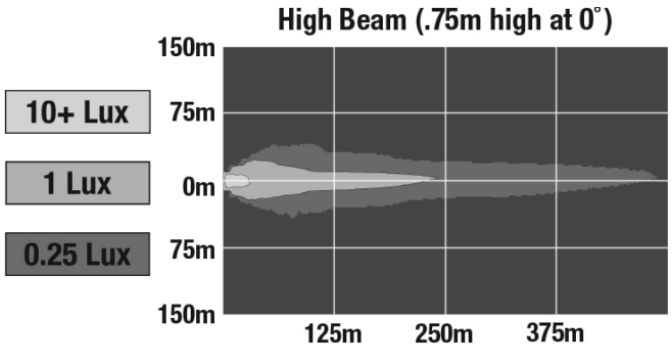

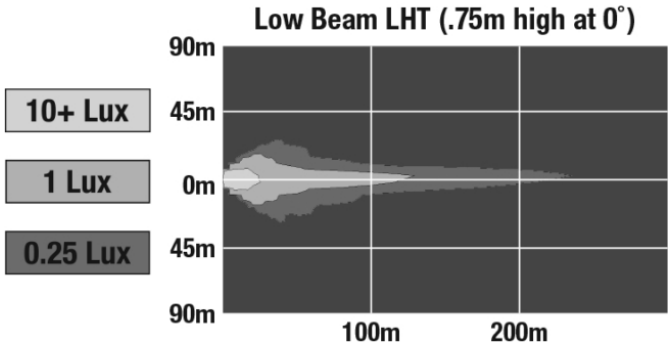

APPLICATIONS



INSTALLATION & APPLICATION INFORMATION

The Model 8700 Evolution J2 Series is intended for use on 2007+ Jeep Wranglers & Jeep Wrangler Unlimited.

Depending on your 2017 Jeep Model, you may need mounting rings to install Model 8700 Evolution J2 LED headlight upgrades. Refer to the table below:

Print date: 2026-11-24

© 2026 J.W. Speaker Corporation • Germantown, WI U.S.A.

www.jwspeaker.com • speaker@jwspeaker.com • 262.251.6660

J.W. SPEAKER® Engineered. Lighting. Solutions.

LED Headlights - Model 8700 Evolution J2 Series

ADDITIONAL INFORMATION

This light has been updated with Dual Burn™ high beam optics.

This technology combines your high and low beam when turning on your high beam, providing the driver with both widespread visibility along with a powerful punch of light down the road.

PRODUCT WARNINGS

For California residents:
⚠ **WARNING:** Cancer and reproductive harm - www.P65Warnings.ca.gov.
⚠ **AVERTISSEMENT:** Cancer et effet nocif sur la reproduction - www.P65Warnings.ca.gov.

ACCESSORIES



Part Number 5868171
Single Mounting Ring (Right Hand Side) for 2017 Jeeps 7" Round Headlights



Part Number 5868181
Single Mounting Ring (Left Hand Side) for 2017 Jeeps 7" Round Headlights



Part Number 8200693
8700 Evolution J2 Mounting Kit for Jeep JL



Part Number 8200461
Mounting Ring Kit for 2017-18 Jeep JK 7" Round Headlights

© 2026 J.W. Speaker Corporation • Germantown, WI U.S.A.
www.jwspeaker.com • speaker@jwspeaker.com • 262.251.6660

J.W. SPEAKER® Engineered. Lighting. Solutions.

LED Headlights - Model 8700 Evolution J2 Series

RELATED PRODUCTS



Part Number 0553973
12V DOT LED High & Low Beam Headlights with Carbon Fiber Bezel - 2 Light Kit



Part Number 0553983
12V ECE RHT LED High & Low Beam Headlights with FP, DRL, & Carbon Fiber Bezel - 2 Light Kit



Part Number 0553993
12V ECE LHT LED High & Low Beam Headlights with FP, DRL, & Carbon Fiber Bezel - 2 Light Kit



Part Number 0554543
12V DOT LED High & Low Beam Headlights with Black Bezel - 2 Light Kit



Part Number 0554553
12V ECE RHT LED High & Low Beam Headlights with FP, DRL, & Black Bezel - 2 Light Kit

© 2026 J.W. Speaker Corporation • Germantown, WI U.S.A.
www.jwspeaker.com • speaker@jwspeaker.com • 262.251.6660

J.W. SPEAKER® Engineered. Lighting. Solutions.